

Operating manual

Clou Pellet

AUSTROFLAMM

www.austroflamm.com

Operating manual
21/10/2025

Version: 4.0

LEGAL NOTICES

Owner and publisher

AUSTROFLAMM GMBH
Austroflamm-Platz 1
A- 4631 Krenglbach
Tel: +43 (0) 7249 / 46 443
www.austroflamm.com
info@austroflamm.com

Edited by: Austroflamm GmbH

Illustrations: Konstruktion

Text: Technical department (Austroflamm)

Copyright
All Rights reserved. The contents of these instructions may be reproduced or distributed only with the consent of the publisher! Printing, spelling and typographical errors reserved.

The information in this document is subject to change without prior notice and should not be construed as a commitment by Austroflamm GmbH. Austroflamm GmbH assumes no responsibility for any errors that may appear in this document.

Contents

1 General information 6
1.1 Copyright 6
1.2 Information about the document 6
2 Purpose of the manual 7
2.1 Storing the manual 7
2.2 Structure of the manual 7
2.3 Representations used 7
2.4 Version control 8
2.5 Abbreviations 8
3 Safety 9
3.1 Importance of the safety instructions 9
3.2 General safety instructions 9
3.3 Special types of danger and personal protective equipment 11
4 Product overview 12
4.1 Intended use 12
4.2 Identification of the product 12
4.2.1 Dimensions 12
4.2.2 Positioning of the type plate 13
4.3 Energy label 13
5 Technical data 14
5.1 Technical data according to Regulation (EU) 2015/1185 and delegated Regulation (EU) 2015/1186 14
5.2 General specifications 17
6 Transport, handling and storage 19
6.1 Transport aid 19
6.2 Storage 20
7 Requirements at the installation location 21
7.1 Safety distances to be observed 21
7.2 Requirements at the room of installation 22
7.3 Chimney requirements 22
7.4 Combustion air / Outside air supply 22
8 Fuel material/-quantity 23
8.1 Fuel material 23
8.2 Fuel quantity 23
9 Installation 24
9.1 Execution 25
9.1.1 Installing Keramott 25
9.1.2 Mounting the WiRCU-BOX 25
10 Installation 48
11 Operation 49
11.1 Requirements for operation 49

12 Commissioning 51
12.1 Initial Commissioning 51
12.1.1 Setting time and date 52
12.1.2 Setting the fuel quality 52
12.1.3 Statistics function 52
12.1.4 Timer function (heating times) 53

13 Operation 54
13.1 Operation using APP and Smartphone 54
13.2 Operation using the rotary controller 55
13.3 Starting up the pellet stove 56
13.4 Wireless room temperature sensor - SMART SPOT 58
13.5 External thermostat 58

14 Settings 59
14.1 Setting the desired heat output and room temperature 59
14.2 Setting the heat output - 5 stages 59
14.3 Setting the room temperature 61
14.4 Adjusting the firebox door 63
14.5 Adjusting the door lock 64

15 Maintenance 65
15.1 Intervals 65
15.2 Changing the storage battery 65
15.3 Service due 67

16 Cleaning 68
16.1 Cleaning the pellet stove, flue gas paths and flue pipe 68
16.2 Stove models with combustion pot 68
16.3 Vacuuming the firebox and combustion pot 70
16.4 Cleaning the exhaust gas pipes 70
16.5 Cleaning the door window 71
16.6 Cleaning the surfaces/body 72

17 Help 73
17.1 List of alarms and errors 73
17.2 Resetting the alarm and error messages 76
17.3 Filling level indicator 76
17.4 Safety temperature limiter 77
17.5 Firebox lining 77
17.6 What to do in the event of a chimney fire 77
17.7 What to do in the event of faults 77

18 Electrical connection 78

19 Disassembling 79
19.1 Removing side cladding 79

20 Accessories 81

21 Spare parts 82

22 Disposal **83**
23 Warranty and guarantee **85**
24 Start-up log **86**
25 Service Report **87**

1 General information

You have decided in favour of an Austroflamm pellet stove.

Congratulations on your decision and thank you for your trust.

Correct operation and care are essential for trouble-free operation and long service life.

The information in this manual is of a general nature. National and European standards, local and building regulations, together with fire regulations must also be complied with.

Read this instruction through carefully before installation and operation. No liability or warranty claims apply for damage incurred by failure to follow this manual. Please observe the instructions in the individual sections.

This manual is a component part of the pellet stove.

In the following list we give you an overview of which sections are important for whom:

Dealer	End customer
Complete operating manual	General information
	Purpose of the manual
	Safety
	Product overview
	Technical data
	Requirements at the installation location
	Fuel material/-quantity
	Operation
	Operation
	Settings
	Commissioning
	Maintenance
	Alarms and error messages
	Spare parts
	Disposal
	Warranty and guarantee
	Data processing
	Start-up log
	Service Report

1.1 Copyright

All Rights reserved. The contents of these instructions may be reproduced or distributed only with the consent of the publisher! Printing, spelling and typographical errors reserved.

1.2 Information about the document

The information in this document is subject to change without prior notice and should not be construed as a commitment by Austroflamm GmbH. Austroflamm GmbH assumes no responsibility for any errors that may appear in this document.

2 Purpose of the manual

This manual is a component part of the pellet stove and is intended to contribute to the pellet stove being safely installed and maintained.

TIP

Please read this manual before using the stove for the first time.

2.1 Storing the manual

Store this manual in case you need it. A current version of the manual can be found online at our homepage www.austroflamm.com.

2.2 Structure of the manual

The table of contents can be found on page 3.

Illustrations in this manual may differ from the delivered product.

2.3 Representations used

The following representations are used in this manual:

Steps with mandatory adherence to the sequence

✓ Prerequisite

1) Step 1
2) Step 2
3) …..

⇨ Intermediate result / additional information

⇨ Result

Steps and bullet points without mandatory sequence

- ….
- ….
  - ….
  - ….

Cross-references

See Technical Data

Useful tips

TIP

Fuel

Use only the recommended fuel!

2.4 Version control

We update our manuals on a continual basis. The current version can be found at our homepage www.austroflamm.com.

This manual applies to all Clou Pellet stoves with the article number 803101 and index b and newer.

2.5 Abbreviations

Abbreviation	Meaning
HMS	Heat memory system
LVM	Air distribution module

3 Safety

In this manual we give you numerous safety instructions for the safe operation of your pellet stove. These instructions are characterized differently as follows, depending on their importance:

3.1 Importance of the safety instructions

NOTICE

Particular behaviour and/or activities that are required for safe working. Failure to follow this can result in material damage.

⚠ CAUTION

Possible dangerous situation (light or minor injuries and material damage).

⚠ WARNING

Possibly imminent danger to life and health of persons (severe injuries or death).

⚠ DANGER

Immediately imminent danger to life and health of persons (severe injuries or death).

3.2 General safety instructions

- The information in this manual represents generally applicable standards and rules. For the installation/operation of the pellet stove, all local regulations including those that relate to national and European standards, as well as emergency service regulations, must be complied with.
- Please carefully store this manual and ensure that it is always available.
- Servicing falls due after a number of hours specific to the appliance has been reached, but at least 1x annually in order to GUARANTEE THE WARRANTY!
- Compliance with the instructions contained here will guarantee the safety of people and the appliance, economic operation and a long service life. The pellet stove has been designed based on technical data standards. See section “Technical Data”.
- Original parts must not be modified or exchanged for parts from other manufacturers. Unauthorised modifications must not be carried out. Such action will void the warranty claim.
- Repairs to your pellet stove must only be carried out by technical personnel who have been trained by the manufacturer.
- When working or intervening on the pellet stove, the power supply must be switched off.
- Diagrams and drawings supplied with the stove are used only as illustrative examples; the manufacturer pursues a policy of constantly developing and updating the product and may make modifications without prior notification.
- All dimensions in this manual are given in mm.
- Your pellet stove is not suitable for use as a ladder or a stand.
- Please note that the surfaces of the pellet stove heat up considerably during operation. We recommend that you use the protective glove supplied to operate the pellet stove.



- Please alert children to these dangers, and keep them away from the pellet stove when it is operating.
- Placing non-heat-resistant objects on the stove or in its vicinity is forbidden.
- Do not place any items of laundry on the pellet stove to dry. Even laundry racks or the like must be placed at a sufficient distance from the hybrid stove - fire risk!
- While your pellet stove is in operation, it is forbidden to process highly flammable or explosive substances in the same room or in adjoining rooms.
- It must be ensured that there is a sufficient supply of combustion air and safe removal of exhaust gases. Therefore, always check whether the chimney is blocked, especially after a long break in operation.
- Fire gases caused by blocked chimneys are dangerous. The chimney and the vent pipe must be free of obstructions and be swept according to instructions.
- In the transition period, i.e. during high external temperatures, a sudden temperature rise can disrupt the chimney draft so that the fuel gases are not completely drawn off. Should this be the case, switch off the pellet stove.
- The convection air grille must never be closed, not even partially.
- Venting systems that are being operated together with the fireplace in the same room or group of rooms may cause problems.
- The pellet stove must be regularly cleaned and maintained: see Maintenance section and Cleaning section.
- Exchange spare parts depending on requirement and condition. Regularly check the electrical and electronic components for damage or wear.
- Safety features must not be bypassed.
- If fuel used is incorrect or too moist, then due to deposits in the chimney this may lead to a chimney fire. Immediately close all ventilator openings on the chimney and inform the fire service. After the chimney has burned out, have it checked by an expert for cracks and leaks.
- Under certain conditions, pellet stove appliances are suitable also for multiple occupancy of chimneys. Your master chimney sweep will inform you of these conditions and carry out the appropriate acceptance.
- Please note that the room in which the stove is installed must have at least one door / one window leading to the outside, or be directly connected to such a room. Other heating appliances and extractor bonnets must not be operated together with these heating appliances as part of the room air system.
- Operation is only permitted with the door closed, the ash pan (if present) locked and the hopper lid closed, except when igniting, when topping up with fuel and removing combustion deposits, in order to prevent heating gas from escaping.
- The door and all the pellet stove's control devices must be closed when the stove is not in operation.
- The installation surface for the pellet stove must have an appropriate load-bearing capacity. If an existing design does not fulfil this condition, suitable measures (e.g. a plate for distribution of the load) must be taken to meet it.
- This manual must be carefully read through before the installation, use or any intervention on the pellet stove.
- The pellet stove is not an incinerator. Waste material (of any kind), liquid fuels, non-recommended fuels or waste products must **NOT** be burnt in the pellet stove.
- Protective gloves must always be worn when modifying or moving the appliance. Example: assembling, disassembling, repairing, attaching accessories, etc.
- Sharp edges may be created during or after the installation of accessory parts. Please use suitable grinding or cutting tools to remove these sharp edges.
- Do not disable, block up or close combustion air openings.
- For cleaning the pellet stove, the connecting piece and the chimney, access must be provided.

- Never use petrol, petroleum-like lamp oils, petroleum, barbecue lighters, ethyl alcohol or similar liquids to ignite or "reignite" a fire in the pellet stove. All such liquids are to be kept away from the space heater when it is in operation.
- Use pellets with a diameter of 6mm.
- Caution - varnish is not an anti-rust protection!
- Only approved transport aids with sufficient load-bearing capacity may be used for transport.
- Burn only the fuel combustible listed and approved in the Fuel section.
- When filling, no loose or easily flammable items of clothing are to be worn.
- It is strictly forbidden to burn or introduce highly flammable or explosive substances (empty aerosols and the like) into the firebox or to store them in the immediate vicinity of your pellet stove. Risk of explosion!
- Warning: radiation, in particular via glass surfaces, can set combustible objects in the vicinity of the appliance on fire. Observe the specifications in the Safety distances section.
- During the first 3-4 hours at nominal heat output, odours may develop. The odors are caused by the evaporation of sheet metal greases and binding agents from the varnishing. Although unpleasant, these fumes are completely non-toxic. We therefore recommend that you well ventilate the room for the first few fires.
- During the heat up and cooling down processes your pellet stove may expand and contract, which sometimes can cause light stretching or popping noises. This is a natural process and does not signify errors which need to be complained about.
- The pellet stove is not suitable as central or sole heating.
- The pellet stove is intended for heating a single room.
- Installation of the pellet stove is only allowed in living areas with normal air humidity. Installation in wet areas is not permitted.

3.3 Special types of danger and personal protective equipment

For certain activities such as installation/dismantling, particular care must be taken that the following safety equipment is worn:

	Safety gloves
	Safety shoes

4 Product overview

4.1 Intended use

Compliance with the instructions contained here will guarantee the safety of people and the appliance, economic operation and a long service life. The pellet stove has been designed based on technical data standards. See section “Technical Data”.

NOTICE

Operation is only permitted with the door shut, ash pan locked and hopper lid closed.

4.2 Identification of the product

In the following illustrations we will inform you of dimensions and the type plate positioning.

4.2.1 Dimensions

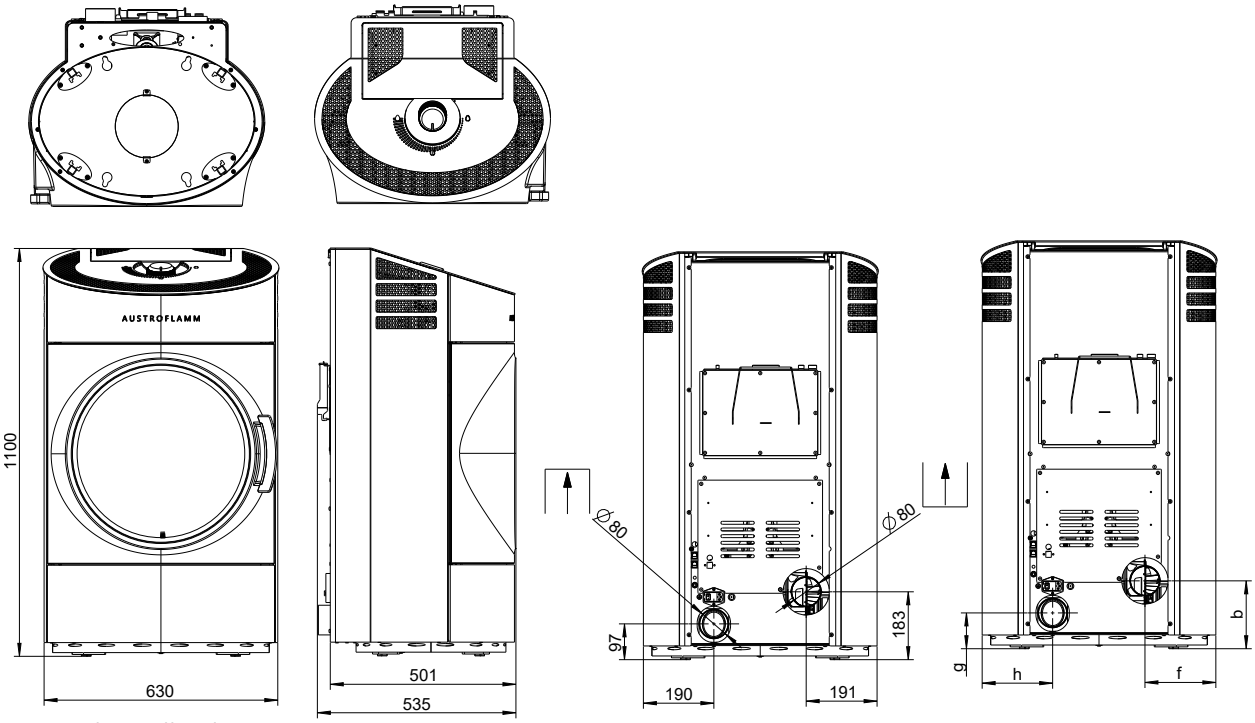

Fig. 1: Clou Pellet dimensions

4.2.2 Positioning of the type plate

Here we show where you can find the type plate. You received a copy of the nameplate with the pellet stove. You can find a copy of the nameplate of your pellet stove on the back of the manual that you received with the stove.

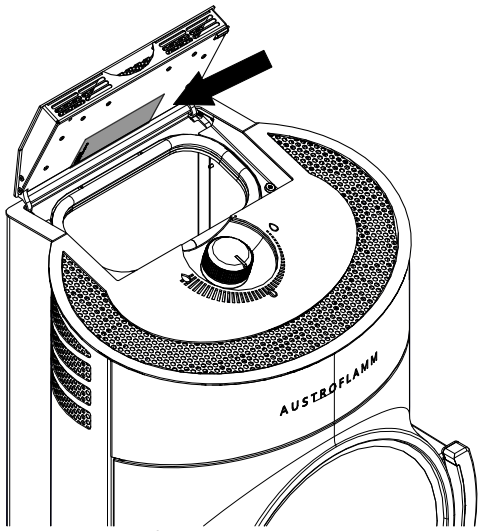

Fig. 2: Type plate

The nameplate of your pellet stove is located on the inside of the hopper lid.

4.3 Energy label

You can find the energy label on our homepage in the download section for your stove.

5 Technical data

5.1 Technical data according to Regulation (EU) 2015/1185 and delegated Regulation (EU) 2015/1186

Contact details for the manufacturer or their authorised representative

Manufacturer:	Austroflamm GmbH
Contact:	-
Address:	Austroflamm-Platz 1
	4631 Krenglbach
	Austria

Appliance details

Model identification(s):	Clou Pellet - 8 kW / 10 kW Type 1/ Type 2
Equivalent models:	-
Test reports:	1721 / F 25/07/1195
Applied harmonized standards:	EN 16510-2-6:2022
Other standards/technical specifications. Specifications:	-
Indirect heating function:	No
Direct heat output:	8.0/ 10.0 kW
Indirect heat output:	-/-

Properties for operation with the preferred fuel

Space heating annual use efficiency η_s:	87.6/87.6 %
Energy efficiency index (EEI):	128/ 128

Particular precautions for assembly, installation or maintenance

Described in the individual sections of the operating manual.

Fuel	**Preferred fuel (only one):**	**Other suitable fuel(s):**	**ηs [x%]:**	**Space heating emissions at nominal heating output (*)**				**Space heating emissions at minimum heat output (*)**			
				PM	**OGC**	**CO**	**NOx**	**PM**	**OGC**	**CO**	**NOx**
				[x] mg/Nm³ (13% O2)				**[x] mg/Nm³ (13% O2)**			
Firewood, moisture content ≤ 25 %	no	no	-	-	-	-	-	-	-	-	-
Compregnated laminated wood, Moisture content < 12 %	yes	no	87.6/87.6	≤ 20/ ≤ 20	≤ 60/ ≤ 60	≤ 300/ ≤ 300	≤ 200/ ≤ 200	≤ 20/ ≤ 20	≤ 60/ ≤ 60	≤ 300 /≤ 300	≤ 200/ ≤ 200
Other woody biomass	no	no	-	-	-	-	-	-	-	-	-
Non-woody biomass	no	no	-	-	-	-	-	-	-	-	-
Anthracite and dry steam coal	no	no	-	-	-	-	-	-	-	-	-
Coking coal	no	no	-	-	-	-	-	-	-	-	-
Semi-coke	no	no	-	-	-	-	-	-	-	-	-
Bituminous coal	no	no	-	-	-	-	-	-	-	-	-
Lignite briquettes	no	no	-	-	-	-	-	-	-	-	-
Peat briquettes	no	no	-	-	-	-	-	-	-	-	-
Briquettes made from a mixture of fossil fuels	no	no	-	-	-	-	-	-	-	-	-
Other fossil fuels	no	no	-	-	-	-	-	-	-	-	-
Briquettes made from a mixture of biomass and fossil fuels	no	no	-	-	-	-	-	-	-	-	-
Other mixture made of biomass and solid fuels	no	no	-	-	-	-	-	-	-	-	-
(*) PM = dust, OGC = organic gaseous connections, CO = carbon monoxide, NOx = nitrogen oxide											

Properties for exclusive operation with the preferred fuels

Specification	Symbol	Value	Unit		Specification	Symbol	Value	Unit
Heat output					**Thermal efficiency (fuel efficiency) (based on the NCV)**			
Nominal heat efficiency	Pnom	8.0/ 10.0	kW		thermal efficiency (fuel efficiency) at nominal heat output	ηth,nom	90/90	%
Minimum heat output (standard value)	Pmin	2.4/2.4	kW		Thermal efficiency (fuel efficiency) at minimum heat output (standard value)	ηth,min	90/90	%
Auxiliary power consumption					**Type of heat output/room temperature control**			
At nominal heat efficiency	elmax	0.015/ 0.018	kW		Single-stage heat output, no room temperature control			no
At minimum heat output	elmin	0.009/0.009	kW		two or more manually adjustable levels, no room temperature control			no
In standby condition	elSB	0.003/0.003	kW		Room temperature control with mechanical thermostat			no
Pilot flame power requirement					with electronic room temperature control			no
Pilot flame power requirement (if present)	Ppilot	n.A	kW		with electronic room temperature control and daytime regulation			no
					with electronic room temperature control and weekday regulation			yes
					Other regulation options (Multiple selections possible)			
					Room temperature control with presence detection			no
					Room temperature control with open window detection			no
					with remote control option			yes

5.2 General specifications

Dimensions and weight	
Height [mm]	1100
Width [mm]	630
Depth [mm]	535
Combustion chamber width [mm]	-
Combustion chamber height [mm]	-
Combustion chamber depth [mm]	-
Flue pipe outlet, diameter [mm]	80
Outside air connection diameter [Ø mm]	80
Weight, basic appliance [kg]	172
Weight Xtra [kg]	-
Weight, HMS [kg]	-
Total weight inc. steel case (STM) [kg]	172
Total weight inc. ceramic case (KGM) [kg]	-
Total weight inc. soapstone case (SPM) [kg]	-
b: Height of flue pipe connection, centre rear (as per diagram) [mm]	183
f: Flue pipe connection from right (as per diagram) [mm]	191
g: Height of external air connection, centre (as per diagram) [mm]	97
h: External air connection from left (as per diagram) [mm]	190
Minimum distance to adjacent combustible materials (e.g. furniture) dP [mm]	800/ 1000
Minimum distance to combustible materials – left side dS_1 [mm]	100/ 150
Minimum distance to combustible materials - distance to rear dR [mm]	100/100
Minimum distance to combustible materials – right side dS_2 [mm]	100/ 150
Minimum distance to combustible materials – bottom dB [mm]	10/10
Minimum distance to combustible materials – floor in front dF [mm]	0/0
Minimum distance to combustible materials – left side radiation area dL_1 [mm]	0/0
Minimum distance to combustible materials – right side radiation area dL_2 [mm]	0/0
Minimum distance to combustible materials – distance to ceiling dC [mm]	750/ 7500
Minimum distance from non-flammable materials [mm]	50/50

Output	
Nominal heat efficiency [kW]	8.0/ 10.0
Minimum heat output [kW]	2.4/2.4
Maximum heat output [kW]	8.0/ 10.0
Minimum room heating capacity [m³]	98/ 128
Maximum room heating capacity [m³]	255/ 350
Pellet hopper capacity [kg/l]	36/ 56
Minimum fuel throughput [kg/h]	0.6/0.6
Maximum fuel throughput [kg/h]	1.9/ 2.3
Burning time, minimum [h]	19/ 15
Burning time, maximum [h]	60/60
Power connection [V/Hz]	230/ 50
Energy efficiency index (EEI)	128/ 128
Energy efficiency class	A+/A+
Direct heat output [kW]	8.0/ 10.0
Indirect heat output [kW]	-/-
Efficiency at nominal heat output [%]	90/90
Efficiency at at part load heat output [%]	90/90

Exhaust gas values for the multiple occupancy of the chimney (according to DIN 18160-1) or rating of the chimney (according to DIN EN 13384-2).

Data for the chimney sweep	
Flue gas mass flow at nominal heat output [g/s]	5.51/ 6.18
Flue gas temperature [°C]	200/ 229
Minimum delivery pressure at nominal heat output [Pa]	12/12
Minimum delivery pressure for chimney calculation [Pa]	3/3

6 Transport, handling and storage



Fig. 3: Crate

Every Austroflamm pellet stove is packed for protection and environmental friendliness.

The packaging consists of

- pallet,
- crate and
- protective film.

The packaging consists of untreated local wood or materials.

Use a lifting truck or forklift to transport the crate including the pellet stove.

1) The pellet stove is secured with cable binders to the side struts of the crate. These cable binders must be removed.
2) The crate is dismantled by the removal of the 4 screws which connect the bottom of the crate to the pallet.
3) The loose wooden crate must be removed from the pellet stove.
4) Undo the pellet stove from the pallet. To do so, screws must be unscrewed.
5) The air cushion / transport protection for the Keramott etc. in the firebox must be removed.
6) Immediately check the goods delivered for completeness and damage in transit.
7) Check the accessory kit: glove, guide, mains cable, information sheets etc. The accessory kit is in the tank container.
8) Before installing the pellet stove, check that all movable parts are working. Any defects must be reported before installing the pellet stove.

6.1 Transport aid

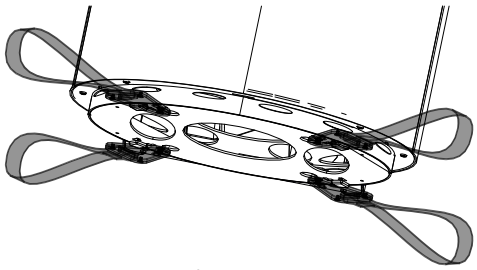

Fig. 4: Transport aid

Only approved transport aids with sufficient load-bearing capacity may be used for transport. These must be removed before installation.

6.2 Storage

The pallet stove must be stored in a dry room/warehouse. Protect against dirt, heat and moisture.

The following illustrations are attached to the crate and must be observed:



- Fragile – always place upright – protect against moisture and store dry.

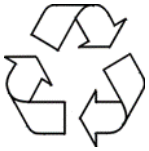

- Remove and dispose of packing material in an environmentally friendly manner.



- The crate can be disposed of in the separate collection for packaging. Local disposal regulations must be observed.

7 Requirements at the installation location

7.1 Safety distances to be observed

If your floor is made of a combustible material, a non-combustible material must be used as protection in the area in front of the appliance. For more detailed information, please contact an Austroflamm dealer.

NOTICE

A floor protection plate must be used if your floor is made from a combustible material.

Safety distances for combustible objects, such as wooden furniture, upholstered furniture, sofas, etc. must be complied with. In the case of very heat-sensitive objects the distance from the pellet stove must be increased in order to avoid damage from the heat.

Please refer to the table below for the necessary safety distances.

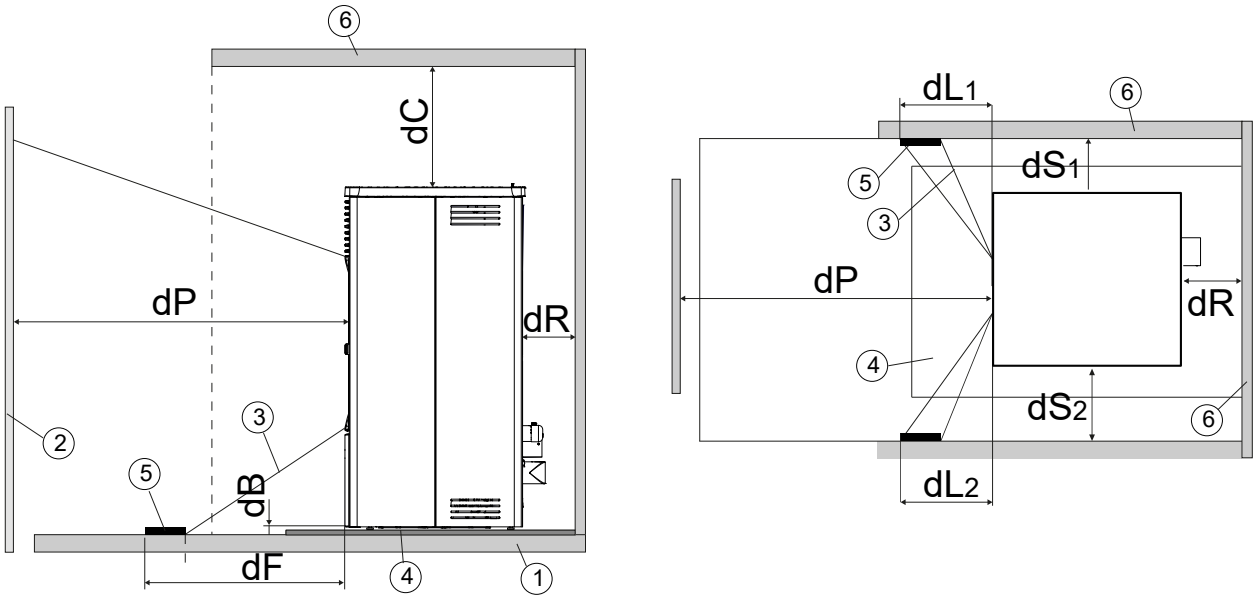

1 Floor	2 Combustible materials in front
3 Irradiated area	4 Floor protection plate
5 Irradiated area to be protected	6 Area of combustible materials area front/ side/back

Safety distance from the fuel	
Minimum distance to adjacent combustible materials (e.g. furniture) dP [mm]	800 / 1000
Minimum distance to combustible materials – left side dS_1 [mm]	100 / 150
Minimum distance to combustible materials - distance to rear dR [mm]	100
Minimum distance to combustible materials – right side dS_2 [mm]	100 / 150
Minimum distance to combustible materials – bottom dB [mm]	0
Minimum distance to combustible materials – floor in front dF [mm]	-
Minimum distance to combustible materials – left side radiation area dL_1 [mm]	-
Minimum distance to combustible materials – right side radiation area dL_2 [mm]	-
Minimum distance to combustible materials – distance to ceiling dC [mm]	750
Minimum distance from non-flammable materials [mm]	50

7.2 Requirements at the room of installation

Your pellet stove must not be set up in:

- spaces in which the required combustion air supply is not guaranteed.
- spaces which are generally accessible, in particular emergency exits (staircases in residential building with no more than 2 apartments are not included in general accessible spaces).
- spaces in which easily flammable or potentially explosive substances or mixtures are processed, stored or manufactured.
- spaces, apartments or units from which air is extracted with the aid of ventilators, such as ventilation- or hot-air heating installations, extractor hoods or exhaust air tumble dryers. Unless the safe function of the pellet sotfe is ensured. This is guaranteed if:
  - the systems only circulate air within a space.
  - the systems have safety features which autonomously and reliably prevent negative pressure in the installation space.
  - simultaneous operation of the fireplace and the air-extracting system is prevented by safety features.
  - the flue gas routing is monitored by a particular piece of safety equipment.

Floor load-bearing capacity

Before installing, verify whether the load-bearing capacity of the substructure can withstand the weight of your pellet stove.

- The installation surface for the pellet stove must have an appropriate load-bearing capacity. If an existing design does not fulfil this condition, suitable measures (e.g. a plate for distribution of the load) must be taken to meet it.

7.3 Chimney requirements

When connecting the flue pipes to the chimney, national and/or local safety regulations must be complied with. Your Austroflamm pellet stove is fitted at the factory with a flue pipe outlet at the rear (see chapter Technical data). When connecting with other pipe diameters the approval of your responsible chimney sweep is required. The flue pipe connection and flue pipe transitions must be sealed accordingly. Your Austroflamm specialist dealer knows the guidelines and will be happy to advise you. For your own safety the connection of the flue pipe must be carried out by a technically competent person.

7.4 Combustion air / Outside air supply

This pellet stove requires sufficient combustion air to operate smoothly. With dense building envelopes, the room air is insufficient. For this reason, the combustion air required must be supplied from outside.

Your pellet stove is prepared for this situation (balanced flue operation). The external air supply pipe must be connected tightly to the pellet stove (e.g. pipe clamp or airtight adhesive tape). Your dealer will advise you on the correct connection.

8 Fuel material/-quantity

8.1 Fuel material



Fig. 5: Pellet



Fig. 6: ENplus A1

Pellets

Poor pellet quality will cause significant residues in the pellet stove when burnt. We therefore urge the use of pellets that have no artificial binding agents. That way only a small unburnt residue is left.

ENplus-A1 certified pellets meet this requirement.

When storing the pellets, it is vital to ensure that they are stored in a cool dry place free of contamination. Damp, dirty or old pellets result in poor combustion and block the screw conveyor.

A screw conveyor blocked due to inappropriate use of pellets is excluded from the guarantee.

We recommend that when a prolonged period of the pellet stove not being used (summertime) is imminent, the screw conveyor be allowed to run empty.

NOTICE

Use only pellets with a **diameter of 6mm** and no more than 1% of the pellets may be longer than 40 mm, with a maximum length of 45 mm.

NOTICE

The use of inferior-quality, damp, dirty or old pellets or other material will damage the working of your pellet stove and void the guarantee and warranty.

Explosive substances

It is strictly forbidden to burn or introduce highly flammable or explosive substances (such as empty aerosols and the like) into the firebox or to store them in the immediate vicinity of your pellet stove due to the risk of explosion!

Fuel

Only burn the recommended fuel.

8.2 Fuel quantity

Maximum fuel quantity

Every pellet stove is designed for a maximum fuel quantity: see Technical Data section. Larger fuel quantities lead to overheating and damage to the pellet stove!

NOTICE

To avoid damage you must **NEVER** operate your pellet stove with a greater quantity of fuel than that specified in these user instructions!

9 Installation

The assembly and installation must only be carried out by an authorized specialist company.

Before installing the pellet stove, check that all movable parts are working. Any defects must be reported before installing the pellet stove.

Observe regionally applicable safety and construction regulations and contact your master chimney sweep in this regard.

Use only heat-resistant sealing materials, sealing tape, heat-resistant silicon and mineral wool.

Make sure that the flue pipe is not blocking the free cross-section of the chimney.

If your pellet stove is provided for balanced flue operation, the stove pipe connections must be connected permanently tightly. Use suitable heatproof silicon for placing the stove pipe on to the conical flue pipe brackets and for inserting into the chimney's pipe chuck.

On no account position the pellet stove on unprotected floor. Corrugated board, cardboard or a disused carpet are suitable for use as an assembly aid and base. These allow you to move the pellet stove carefully.

For proper installation we recommend original flue pipes from our Austroflamm flue pipe range.

In the following sections we will give you information on

- the integration or attachment of appliance parts,
- other important facts relating to the installation.

The protective equipment and tools listed are required for the following work steps

Type of protective equipment	
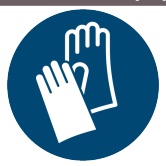	Safety gloves
	Safety shoes

Work equipment	Activity
Insulated tools	In order not to damage or scratch the varnish, no sharp objects or tools should be used. Instead **insulated tools** are used by preference when assembling and disassembling stove parts.
Torx wrench set	various installation jobs
Allen key set	various installation jobs
Fork wrench set	various installation jobs

9.1 Execution

9.1.1 Installing Keramott

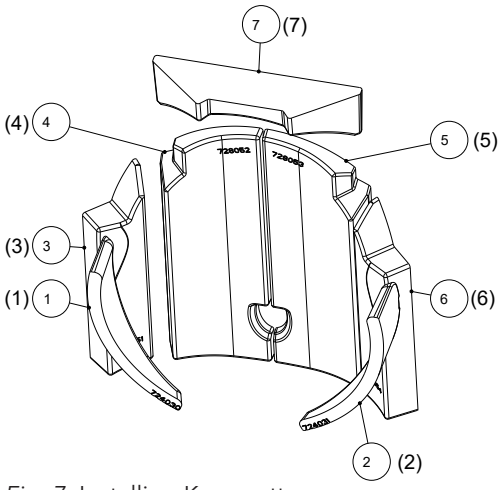

Numbering in the round brackets = installation sequence

Fig. 7: Installing Keramott

9.1.2 Mounting the WiRCU-BOX

9.1.2.1 Included in the OPTIONAL WiRCU-Box



WiRCU-Box



1.5 m data cable



Information card with MAC address and PIN number

⚠ WARNING

The WiRCU-Box must not come into contact with water, cleaning agents, solvents or other liquids. These will damage the box's electronics and cause malfunctions.

Technical characteristics:

- Temperature range for storage and operation: -20°C to +60°C
- Permissible air humidity for storage and operation: max. 95 %, non-condensing
- Wireless type: 802.11 b/g/n 2.4 GHz
- Host controller link: proprietary protocol
- Dimensions: 76 x 51 x 23 mm
- Mounting on stove: 2 screws (hexagon socket M4x8)
- Connections: Micro USB connection for firmware update, RJ11 connection for communication and power supply
- Protection class: IP20 - when mounted in recommended position

Technical requirements for the WLAN network:

- Wireless type: 802.11 b/g/n 2.4 GHz
- Security encryption: WPA2 or clear/unencrypted
- No MAC address filtering
- **TCP ports 5001 & 5101** must be activated

For the correct configuration of your WLAN router please contact your IT administrator or IT specialist.

9.1.2.2 How to attach the WiRCU-Box to the stove



1) On the right-hand side of the rear panel of the stove there are 2 boreholes with hexagon socket M4 x 8 screws prepared for the mounting of the WiRCU-Box. These screws must be unscrewed with a 2 mm Allen key before mounting.
   ⇨ The position in which the WiRCU-Box is installed on your stove may be on a different place on the rear panel. This however can be clearly identified by the two ISK M4 x 8 screws.



2) Now mount the WiRCU box on the rear panel in the position illustrated.
   IMPORTANT: The connection for the data cable should be located on the top of the WiRCU box. In this position the MAC address and the PIN number on the visible side of the WiRCU box can always be seen.



3) Now connect the data cable to the WiRCU box. Connect the 2nd end to the free 6-pin socket below the WLAN. This creates the connection between the controls of your stove and the WiRCU-Box.
As soon as the heating appliance is supplied with power, the “CONT” LED on the WiRCU-Box will be constantly lit and the “WI-FI” LED will flash as follows: 0.5 sec. ON / 0.5 sec. OFF.

9.1.2.3 Downloading and integrating the Austroflamm PelletControl APP

To incorporate the WiRCU-Box into your WLAN network you will need the Austroflamm PelletControl APP on your SmartDevice.

The WiRCU-Box can only be operated with the Austroflamm PelletControl APP. The current version of the Austroflamm PelletControl APP is available for download in the APP Store (for iOS operating systems) and at Google Play (for Android operating systems). You can download the APP by scanning the relevant QR code:

Android PelletControl

iOS PelletControl

Working with your SMART DEVICE (telephone, Tablet, etc.), and the AUSTROFLAMM PELLET CONTROL APP, the WiRCU-Box enables remote access to your heating appliance.

How remote access works:

- Commands are conveyed via the Austroflamm PelletControl APP, the Internet and the Cloud server to the controls and the operating system (display or control knob). Please be aware: There is a time delay between inputting the command and its execution.
- For the stoves with rotary control, the rotary control must be positioned at 3 o’clock for the WiRCU-Box to work.
- If you connect the WiRCU-Box to a **WLAN modem/router/Smartphone** that is operated with **mobile data**, please bear in mind the additional costs for data transmission.

9.1.2.3.1 How to create the connection to your WLAN network using an Android device

- Enable WLAN on your Smartphone.
- Launch the Austroflamm PelletControl APP.
- The instructions for setting up the WiRCU-Box are displayed in the language set for your SMART DEVICE (see Section Changing the APP language displayed [▸on page 42]).
- Read and confirm the end user licence agreement.
- **Carefully carry out the following steps.**

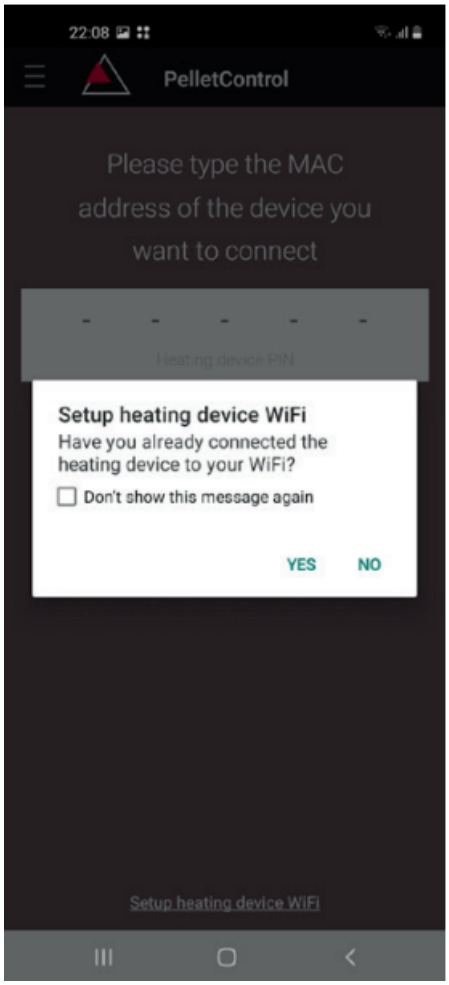

1) Launch the AUSTROFLAMM PELLET CONTROL APP. On launching, the APP displays the menu page shown.
2) Press “No” unless your WiRCU-Box is already connected to your WLAN network.

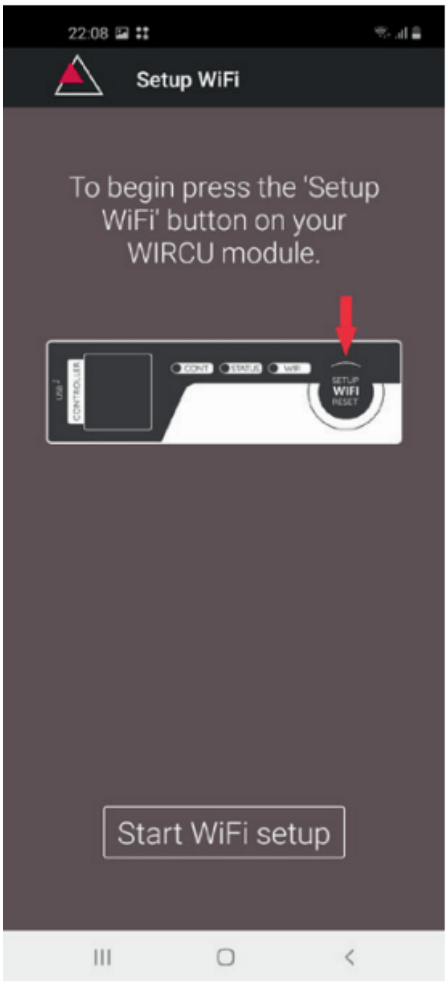

3) The APP will guide you step by step with instructions through the connection process. Follow these instructions.

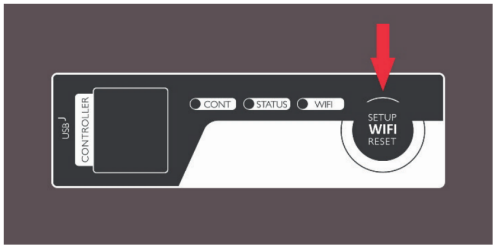

4) Press the “SETUP WiFi RESET” button on the WiRCU-Box. After the button is pressed, the WLAN LED will flash rapidly (see Section LED display/function information [▸on page 41]).
5) The WiRCU-Box then switches on its own WLAN network “WiRCU-XXXXXX”.
After starting this process, you have about **3 minutes to establish the connection between the WiRCU-Box and your WLAN network**. (If you exceed this period, you will have to repeat the connection process.)

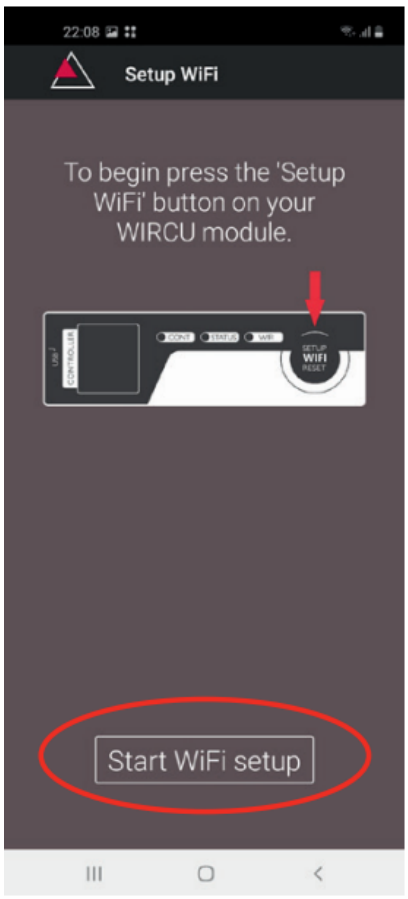

6) On the APP screen, press “Start WLAN set-up”.

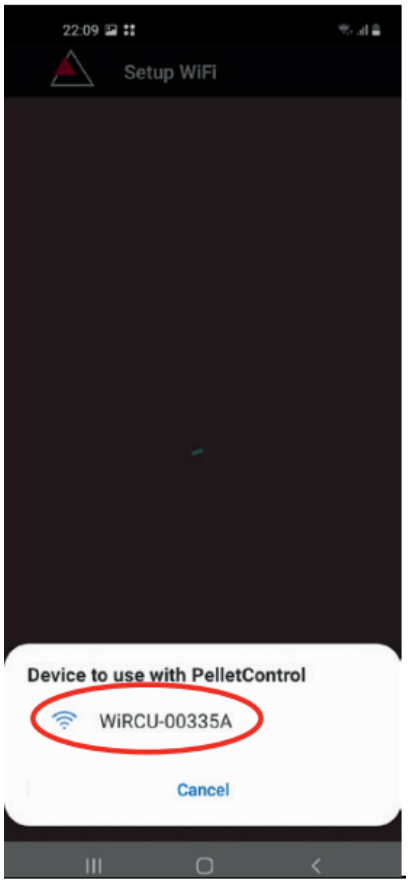

7) Now your Smart device will be shown looking for the “WiRCU-XXXXXX” WLAN network. The search will last a few seconds.
8) As soon as the WiRCU-Box WLAN network is found, “WiRCUXXXXXX” will appear.
9) Select the suggested WLAN network.

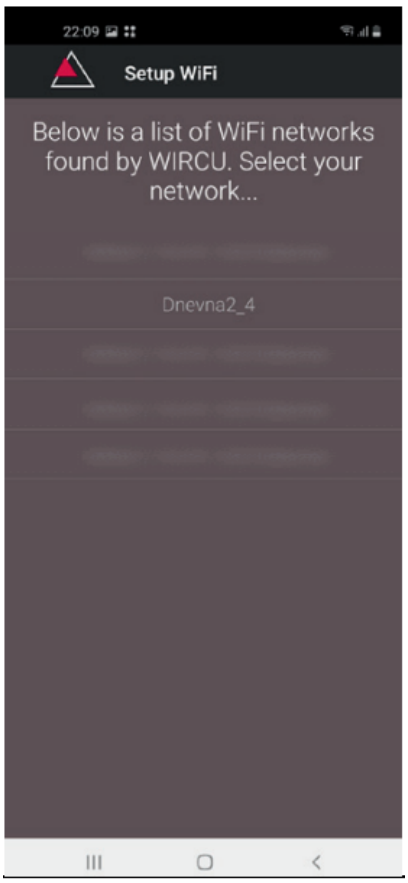

10) After the WLAN network “WiRCUXXXXXX” has been selected, the APP will list all available WLAN networks. From this list, select the WLAN network to which your WiRCU-Box should be connected in future.



11) After selecting the network, you will be asked to enter your password. Enter the password for your WLAN network and then press “Finished”.
Attention: If your WLAN network is not password protected, press “Finished” without entering a password.

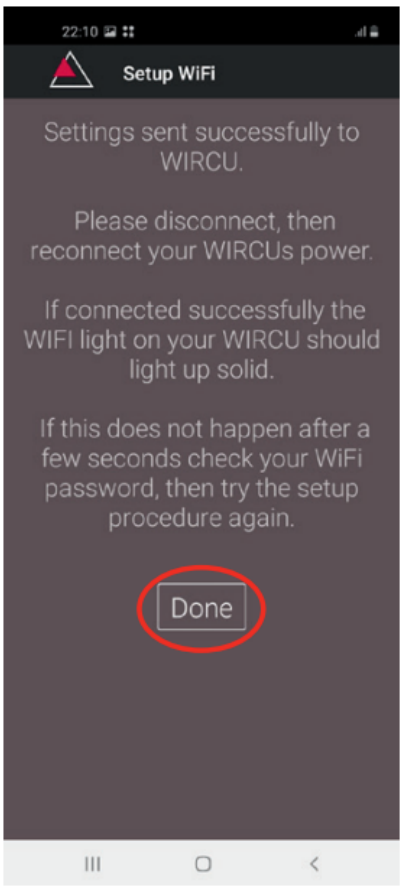

12) Wait until the message “Settings successfully transmitted to WiRCU-Box” appears. Then press “Finished”.
13) Now disconnect the data cable from the WiRCU-Box. Then shortly after, reconnect the cable.
14) Now wait until all 3 LEDs on the top of your WiRCU-Box are permanently lit. (Should this not be the case, repeat the process as per the section How to create the connection to your WLAN network using an Android device [▸on page 28] and / or follow the sectionThe WLAN network “WiRCU-XXXXXX” is not found [▸on page 40]).



15) In the window displayed, now enter the MAC address and PIN number of your WiRCU-Box. You can find this data on the WiRCU-Box or on the information card supplied with it.



16) Select the “Save MAC address and PIN number” function. This saves your input until it is changed.
17) Press “Connect”.

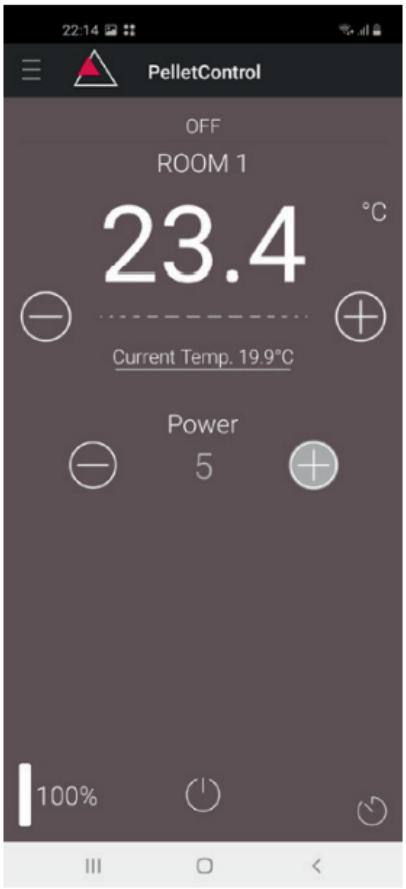

18) Your stove can now be operated via the APP.
19) You can read in Functions and operations of the Austroflamm PelletControl APP [▸on page 41] about the options that the APP offers you.

9.1.2.3.2 How to create the connection to your WLAN network using an iOS device

- In the SMART DEVICE MENU, activate the “WLAN” function.
- Open the Austroflamm PelletControl APP.
- You will now receive instructions for connecting the WiRCU-Box to the WLAN router. These will appear in the language that your Smartphone has activated as standard (if not, see Section Changing the APP language displayed [▸on page 42]).
- Read and confirm the displayed end user licence agreement.
- Then carry out the following steps shown on the screen:

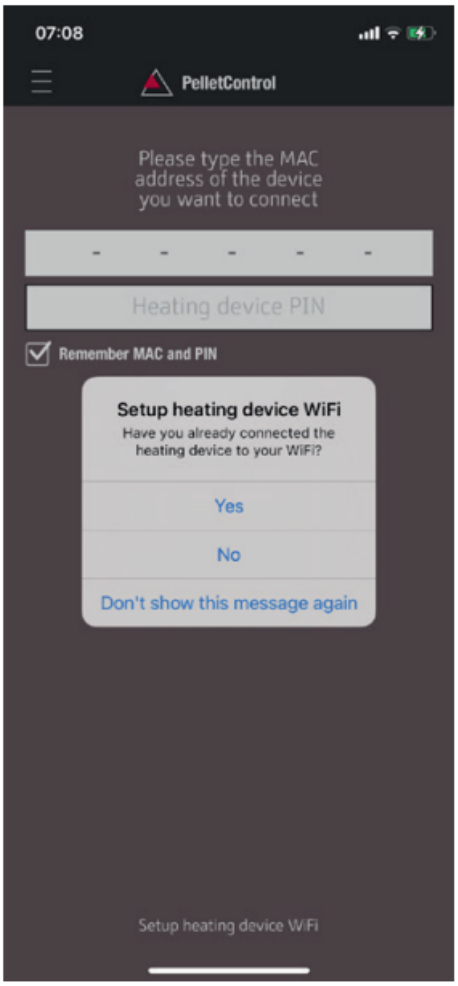

1) Launch the AUSTROFLAMM PELLET CONTROL APP. On launching, the APP displays the menu page shown.
2) Press “No” unless your WiRCU-Box is already connected to your WLAN network.



3) The APP will guide you step by step with instructions through the connection process. Follow these instructions.

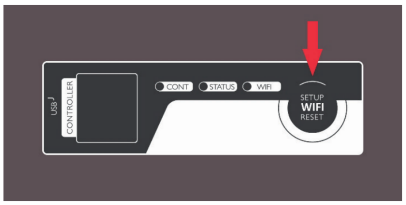

4) Press the “SETUP WiFi RESET” button on the WiRCU-Box. After the BUTTON is pressed, the WLAN LED will flash rapidly (see Section LED display/function information [▸on page 41]).
5) The WiRCU-Box then switches on its own WLAN network “WiRCU-XXXXXX”.
After starting this process, you have about 3 minutes to establish the connection between the WiRCU-Box and your WLAN network. (If you exceed this period, please repeat the process.)

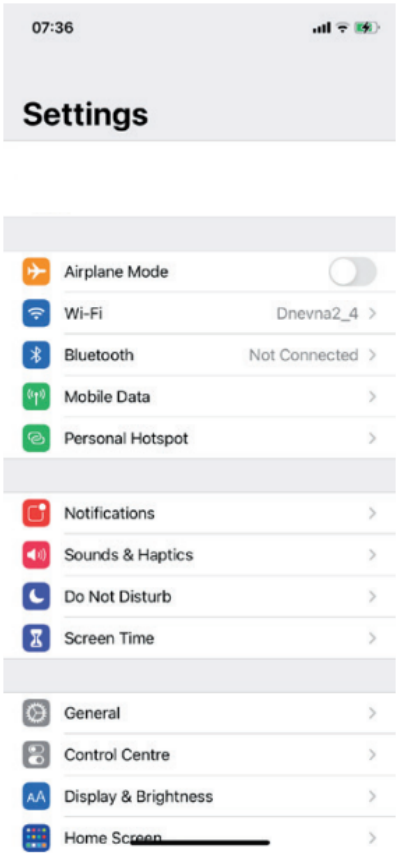

6) Now switch from the APP into the settings menu of your Smart device and activate the WLAN menu.

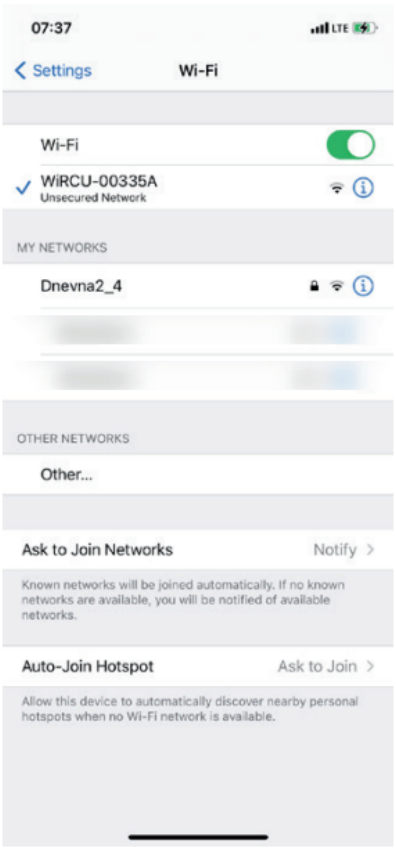

7) Wait until your SmartDevice has refreshed the list of WLAN networks in the WLAN menu. Then select the WLAN network “WiRCUXXXXXX”.

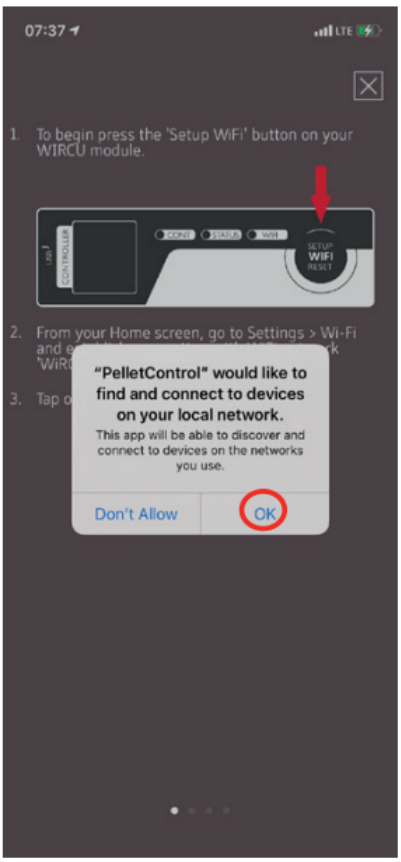

8) Now go back to the AUSTROFLAMM PelletControl App. Here, you will be asked to select the WLAN network "WiRCUXXXXXX".

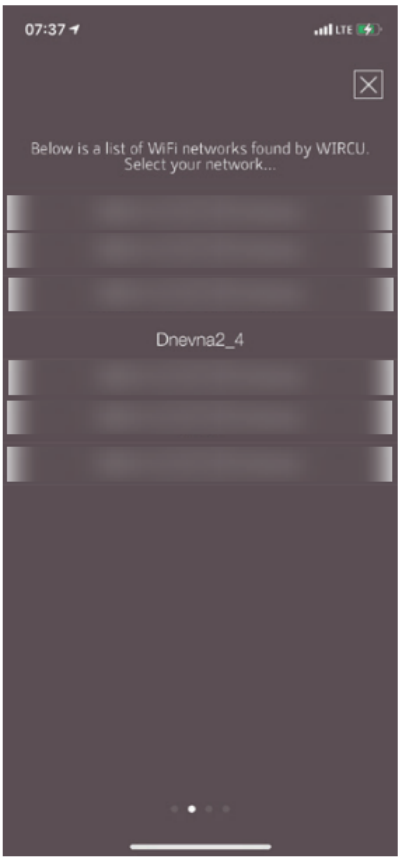

9) Now the "CONTINUE" prompt will appear. Press it. A list of all available WLAN networks will be displayed. From this list, select the WLAN network to which your WiRCU-Box should be connected in future.

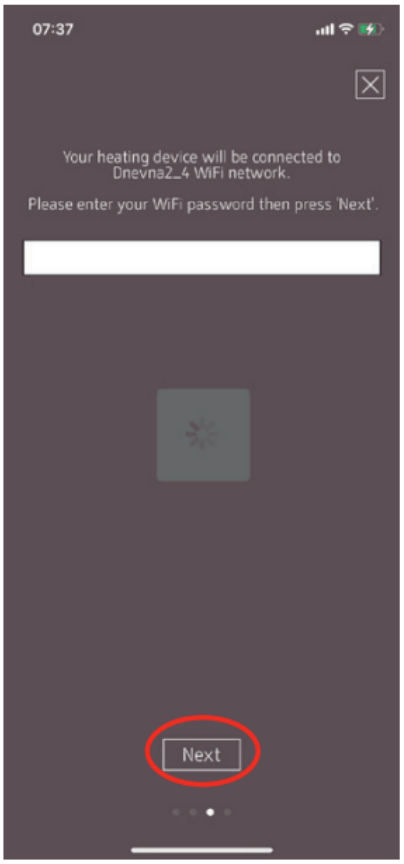

10) After this you will be prompted to enter the password. Enter the password of your WLAN network. Then press “Continue”. (If your WLAN network is not password protected, press “Continue” without entering a)

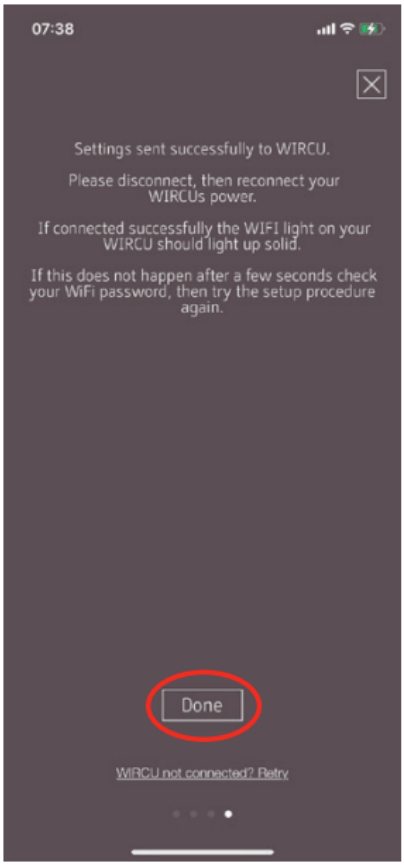

11) Wait until the message “Settings successfully transmitted to WiRCU-Box” appears. Then press “Finished”.
12) Now disconnect the data cable from the WiRCU-Box. Then shortly after, reconnect the cable.
13) Now wait until all 3 LEDs on the top of your WiRCU-Box are permanently lit. (If this is not the case, repeat the process according to the section
    - ⇨ How to create the connection to your WLAN network using an iOS device [▸on page 34] and/or follow the section
    - ⇨ The WLAN network “WiRCU-XXXXXX” is not found [▸on page 40]).

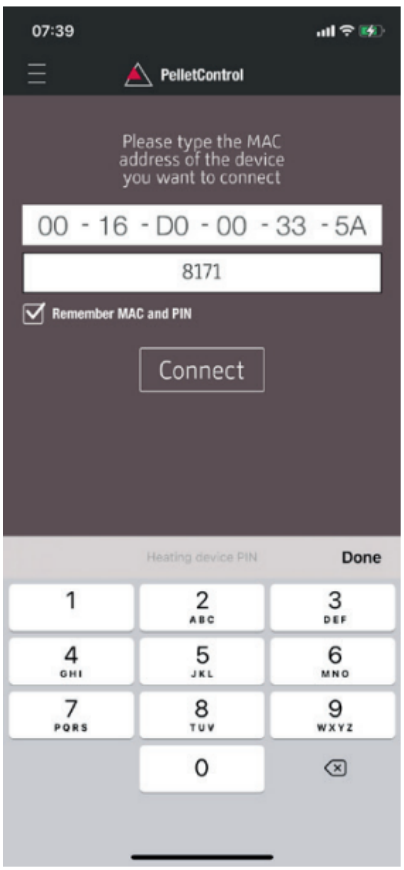

14) Now enter the MAC address and PIN number of your WiRCU-Box in the window that appears.
You can read this data on the side of the WiRCU-Box or on the information card included in the delivery.

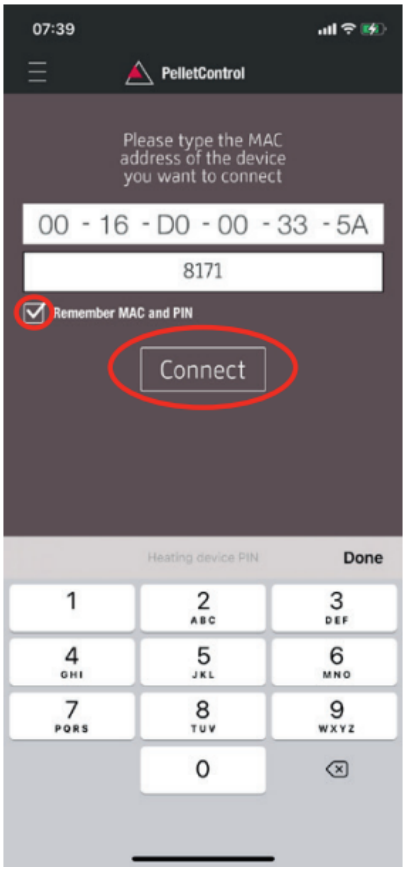

15) Select the “Save MAC address and PIN number” function. This saves your input until it is changed.

16) Press “Connect”.

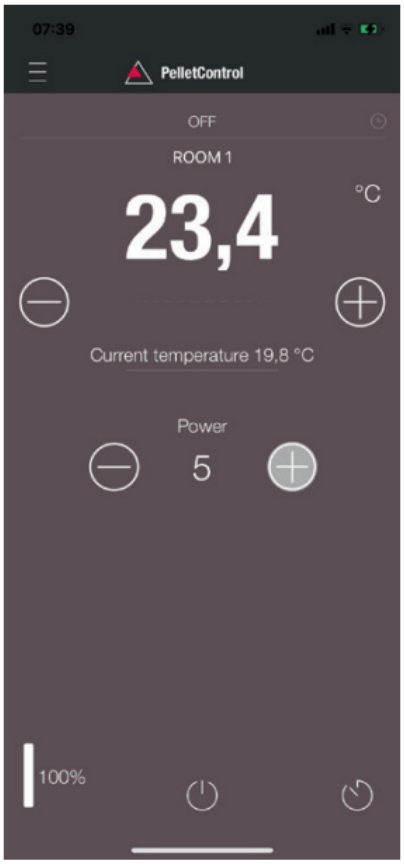

17) Your stove can now be operated via the APP. You can read in Functions and operations of the Austroflamm PelletControl APP [▸on page 41] about the options that the APP offers you.

9.1.2.3.3 The WLAN network “WiRCU-XXXXXX” is not found

- Contact your AUSTROFLAMM dealer or carry out the connection process using a PC with the WiRCU HOME PROGRAMMER software.
- This software is available free of charge as a download on the FUMIS HOMEPAGE www.fumis.si/en/support/wircu-connection-guide. You are also shown here how to correctly manage the software.

9.1.2.4 How to reset the WiRCU-Box settings

Press the “SETUP WiFi RESET” button on the WiRCU-Box until all 3 LEDs on the top of the WiRCU-Box are lit up together and then go out in sequence. This process requires approximately 10 Seconds.

Now you have deleted all the WLAN networks previously saved on the WiRCU-Box.

9.1.2.5 LED display/function information

The WiRCU-Box informs you of the current functional status via LEDs on the top of the box. (Knowing the particular functional status is vital for resolving problems.)

The following functional statuses are displayed on the WiRCU box via LEDs:



LED "CONT"

1) Blinking (0.5 sec. ON/0.5 sec. OFF): Establishing communication with the heating appliance.
2) Continuously ON: Communication established with the heating appliance.

LED "STATUS"

1) Blinking (0.5 sec. ON/0.5 sec. OFF): Establishing connection to the server.
2) Slow blinking (1 sec. ON/1 sec. OFF): Setting up cloud functionalities (after successfully connecting the appliance to the cloud server).
3) Continuously ON: ready for operation by remote access via app.

LED "SETUP WIFI RESET"

1) Rapid blinking (0.25 sec. ON/0.25 sec. OFF): Pressing the "SETUP WIFI RESET" button switches the WiRCU-Box into "WLAN network mode". In this mode the WLAN box looks for available WLAN networks and enables connection to a network.
2) Blinking (0.5 sec. ON/0.5 sec. OFF): Creating connection to the Access Point.
3) Slow blinking (1 sec. ON/1 sec. OFF): Acquiring the IP address (after creating the connection to the Access Point).
4) Continuously lit: Communication with the WLAN router has been created.

9.1.2.6 Functions and operations of the Austroflamm PelletControl APP

NOTICE

You will only have all the functions of the WiRCU-Box and the Austroflamm PelletControl APP if the WiRCU-Box has the current software and the current AUSTROFLAMM PELLET CONTROL APP VERSION is loaded on your Smart device.

9.1.2.6.1 Changing the APP language displayed

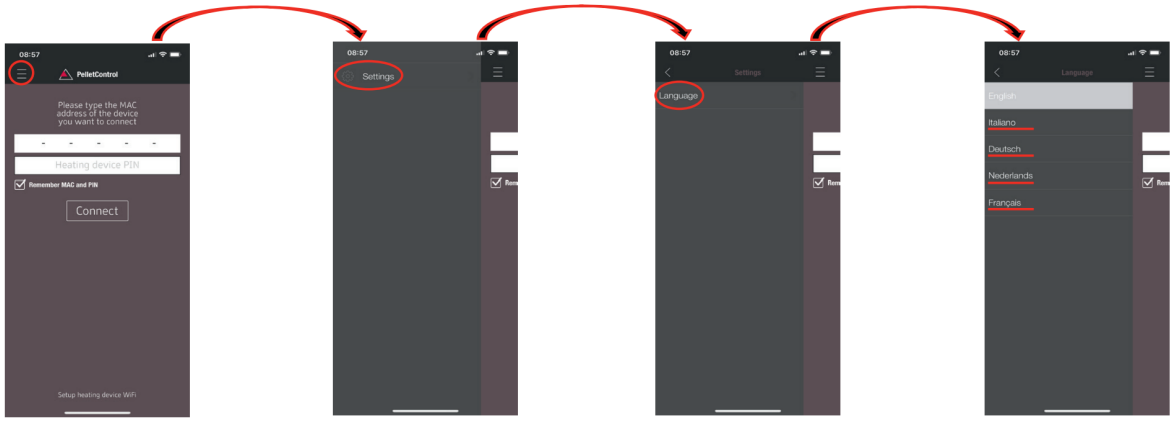

9.1.2.6.2 The APP - the main menu screen/available functions

Numerous shortcuts and settings can be directly called up on the MAIN MENU SCREEN of the APP.

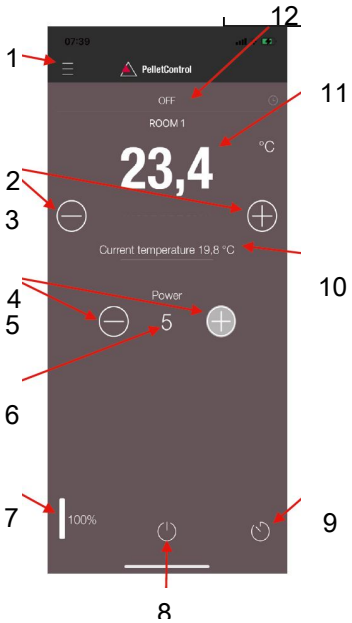

1	Menu function	2	increase desired room temperature
3	reduce the desired room temperature	4	increase heat output
5	reduce heat output	6	current heat output
7	fuel level display	8	ON/OFF button
9	delay timer	10	current room temperature
11	desired room temperature	12	stove status

Stove status

This will inform you about the current operating state – e.g. off, pellet operation, firewood operation, timer operation, etc. – of your stove. The scope of the operating states depends on the model of the stove.

Desired room temperature

This value displays the desired room temperature value. The desired value can be changed with the (-) and (+) button. The desired room temperature can be set within the limits 0°C – 40°C.

Reduce/increased the desired room temperature

Pressing the (-) button reduces the desired room temperature. Pressing this (+) button increases the desired room temperature. The temperature is reduced or increased by 0,2 °C increments.

Current room temperature

This function displays the current room temperature. On any Austroflamm pellet stove, this is recorded by a wired sensor on the right-hand side of the back of the stove near the floor. When using the optional wireless temperature sensor / AUSTROFLAMM SMART SPOT, the current room temperature is measured from the location of this sensor.

Reduce/increase heat output

The set heat output is displayed with the numbers between the (-) and (+) button. The output can be set in the range of 1 (minimum output) to 5 (maximum output).

The output changes by one level at a time when the buttons are pressed. Pressing the (-) button reduces the desired output level. Pressing the (+) button increases the desired output level. The higher the output level, the higher the heat output and with it the fuel consumption as well.

The nominal heat output is dependent on the model.

Fuel filling level indicator

The indicator shows the current filling level of the pellet container. This indicator will inform you in good time when the pellets need topping up.

ON/OFF button

To START or STOP the stove, press the ON/OFF button.

NOTICE

The ON/OFF button cannot reset errors and warning messages. Errors and warning messages can only be reset on the heating appliance itself ABOUT the display or the control knob.

IMPORTANT: In order to be able to use the APP to start a stove fitted with rotary control and LED display, the rotary control must be set to at least 3 o'clock.

Delay timer

The delay timer is a "one-shot timer". This means the stove is only started or stopped once when this delay timer is activated. The stove can be started or stopped either after the desired set time or at a specific point and on a specific date in the future.

9.1.2.6.3 Other APP menus

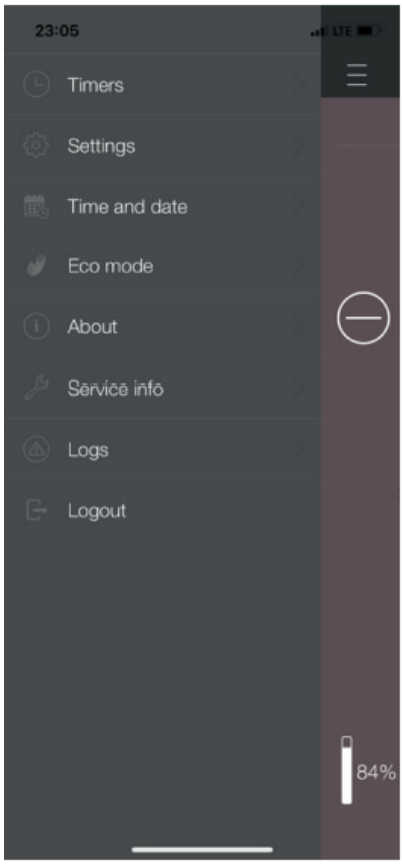

The following submenus are available in MENU settings:

- Timers
- Settings
- Time and date
- Eco-mode
- About
- Service Information
- Logs
- Logout



TIMERS MENU

This can be used to set daily- and weekly programmes for the heating appliance. The specified heating times are easy to activate and deactivate. Entirely as required. The saved heating times can be easily changed and new heating time requests can be easily added.

NOTICE

The current operating software on your stove has a “frost protection mode”. This is only active when the TIMER MODE is activated

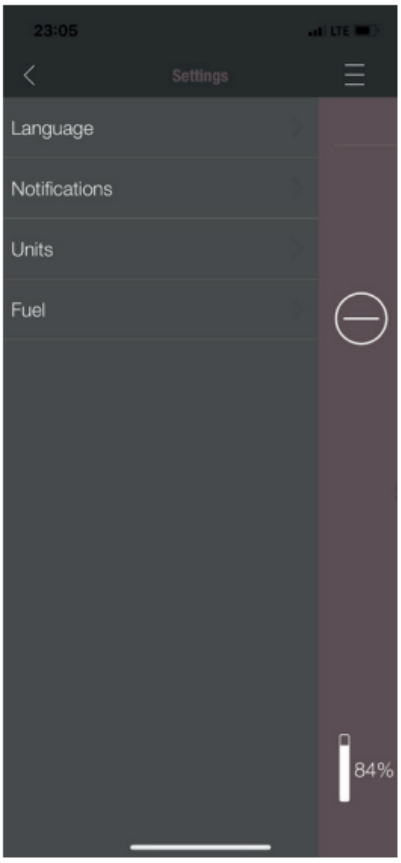

SETTINGS

This menu allows the following settings to be made:

- **LANGUAGE:** The language displayed can be changed.
- **MESSAGES:** The display of error- and warning messages during the stove's operation can be activated or deactivated.
- **UNITS:** On iOS SMART DEVICES the temperature display can be set in °C or °F.
- **FUEL**: The fuel level display can be activated or deactivated here. On some models the stove output can also be adjusted here for variable pellet quality.

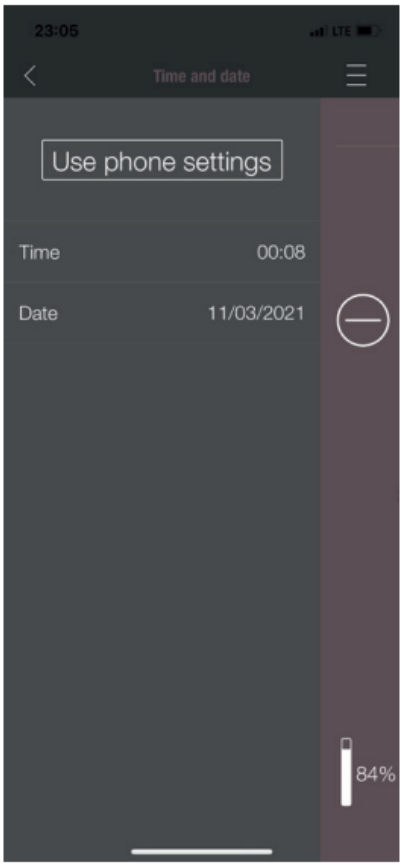

TIME AND DATE

The correct entry of time and date is vital for the TIMER FUNCTION and the STATISTICS DISPLAY.

The time and date can be

- stored either
- manually or automatically

via the telephone settings.



ECO-MODE

When ECO-MODE is activated, the heating appliance starts and stops automatically as soon as the specified temperature limit values are reached.

Example:

- The desired room temperature is 23 °C.
- The shut-off temperature is set at 0.6 °C.
- The restart temperature is 1.0 °C.

In this example the heating appliance will stop operating at a room air temperature 23.6 °C and start again at a room air temperature of under 22.0 °C.

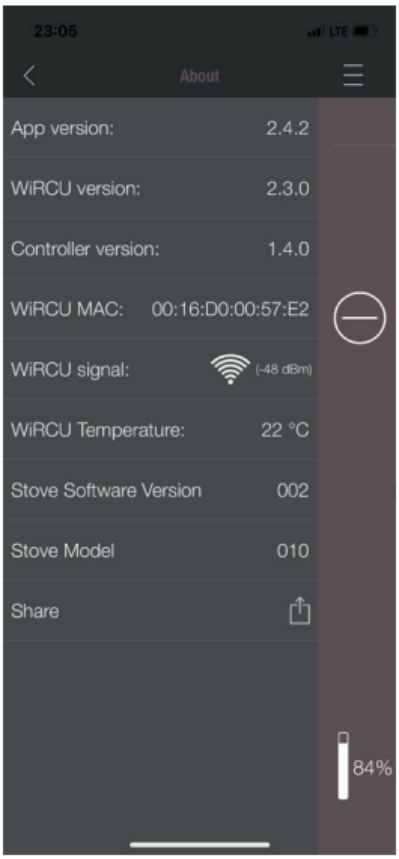

ABOUT

The ABOUT MENU shows the APP-, the WiRCU-Box, the CONTROLLER software version and the operating software version of the heating appliance. The MAC address and strength of the WLAN signal can also be read. For optimum operation of the WiRCU-Box, it is important that the value is between -10 dBm and -80 dBm. To achieve the best possible signal reception, position the WLAN router close to the WLAN Box.

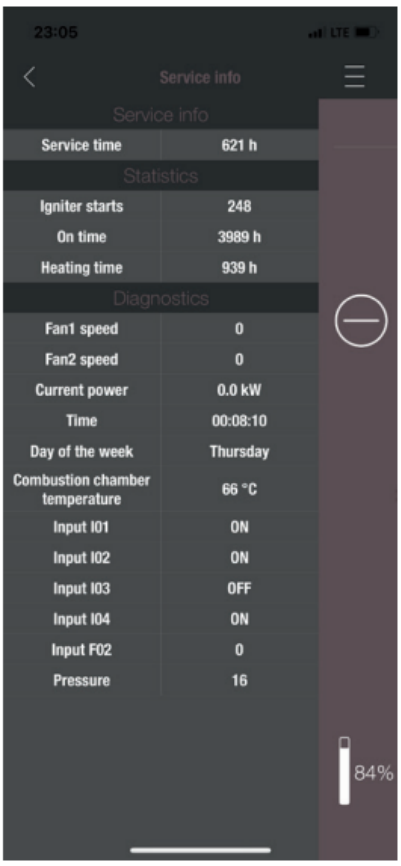

SERVICE INFO

This menu gives you the following information:

- SERVICE INFO displays the time remaining until the annual service.
- STATISTICS displays the number of stove ignitions, the network hours and the operating hours.
- The operating status of the heating appliance can be viewed under DIAGNOSIS. The current operational status of all control outputs (e.g. motors, ...), all control inputs (e.g.: temperature control devices, etc.) are displayed here. The information displayed is extremely useful for the AUSTROFLAMM SERVICE ENGINEER in the event of malfunctions.

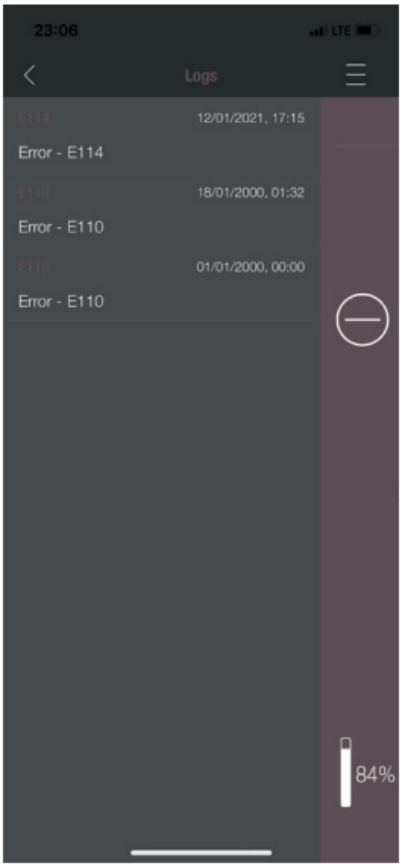

LOGS

Errors occurring are logged here in chronological order. This information is extremely valuable for the AUSTROFLAMM SERVICE ENGINEER when resolving malfunctions.

10 Installation

Installation should only be carried out by an Austroflamm service engineer or an authorised specialist company.

Please observe the regionally applicable safety and construction regulations and contact your master chimney sweep in this regard.

11 Operation

11.1 Requirements for operation

External combustion air supply

Every combustion requires oxygen. This is drawn from the environment of the heating appliance.

In modern buildings the outside covering is very thick. Therefore, there is an insufficient flow of fresh combustion air. In such cases the supply of external combustion air is necessary. This is required even with the use of aeration and ventilation systems in the home.

NOTICE

The combustion air connection is marked on the rear of the appliance with a supply air symbol.

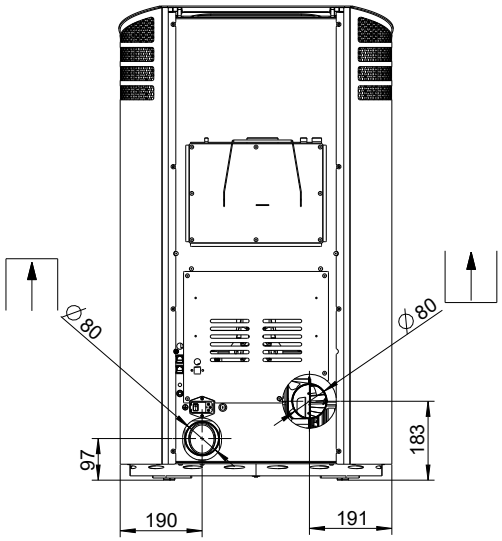

Fig. 8: Connection, rear

A pipe or hose of Ø 80 mm must be used for connecting the external combustion air supply. If the length of the pipe is more than 2 m, the diameter should be at least 100 mm. The length of the pipe or hose should be no longer than 3 m. This supply line must have no more than three bends.

When directly connecting to the outer wall, attention must be paid to formation of condensation and protection from the wind at the inlet.

Lack of combustion air causes poor combustion, and increased soot formation and volume of ash.

Connection to the chimney

The information in this manual is of a general nature. National and European standards, local and building regulations, together with fire regulations must also be complied with.

The stove must be connected to a chimney approved by the chimney sweep. Penetration of condensation into the stove must be avoided.

NOTICE

The flue pipe connection is marked on the rear of the appliance with an exhaust gas symbol.

The flue pipe connection must be executed in accordance with the technical data sheet. For any questions please contact your dealer.

- The chimney must be designed in accordance with the stove's technical data (see Technical data).
- The horizontal length of the exhaust pipe must not exceed 2.5 m.
- A maximum number of 3x90° bends must not be exceeded. Each bend must have a cleaning aperture.
- The chimney must be resistant to condensation.
- The chimney must provide at least 3-12 Pa draught in order to be able to adequately draw off exhaust gases even in the event of a power failure.
- Austroflamm GmbH accepts no liability or responsibility for the connection of our heating appliances to shared exhaust pipes/chimneys – multiple occupancy. For more information consult a chimney sweep and check your national, regional and local building regulations.

12 Commissioning

12.1 Initial Commissioning

For the initial commissioning of your pellet stove you will be assisted by an authorised Austroflamm service engineer. In the process he will show you the correct operation and the functions of the appliance. He will also inform you of options for your stove, e.g. WLAN OPTION, wireless SMARTSPOT for adjusting the desired room temperature.

The following settings are carried out during the initial commissioning.

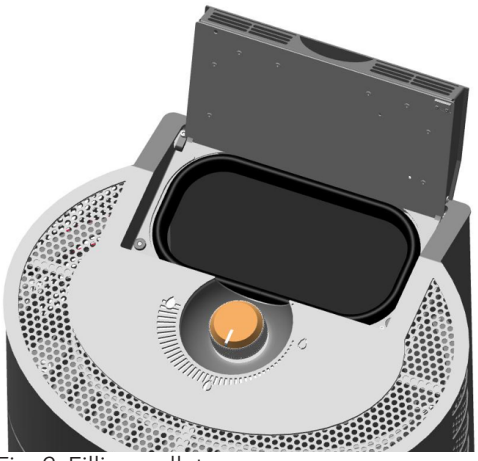

Fig. 9: Filling pellets

1) The pellet stove must already be connected to the chimney. Sufficient combustion air must be supplied.
2) Remove the accessories from the pellet hopper and the firebox.
3) Fill the hopper with pellets and close the hopper lid.

NOTICE

In certain models a safety switch monitors the proper closing of the hopper lid and warns the user if it stays open.

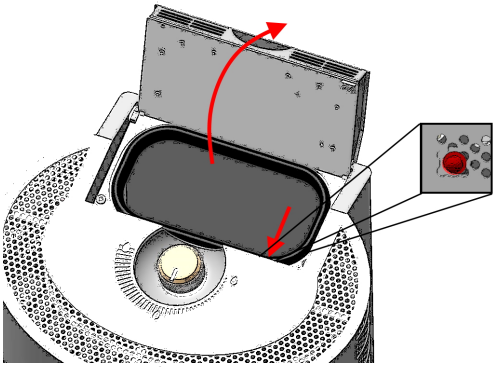

Fig. 10: Reset button

✓ Before the first start the pellet stove screw shaft must be manually filled.

4) To do so, keep the RESET button pressed for more than 3 seconds.
   ⇨ As long as you keep this button pressed, the screw will keep delivering pellets into the screw shaft.
   ⇨ The screw conveyor requires about 3 minutes to fill up the screw shaft.

5) As soon as the first pellets fall into the combustion pot, you can stop the manual filling.
6) After manually filling the screw, be sure to empty the combustion pot of any pellets that have dropped into it. After this you can start up your pellet stove.

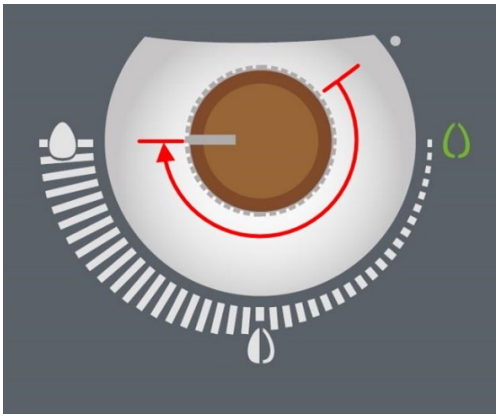

7) To start up the pellet stove, now turn the rotary controller clockwise from the initial position to the stop.
   ⇨ The fully automated start-up begins immediately afterwards. This takes around 10 minutes. After that the stove burns at the particular heat output that was set.

The stove body, many steel and cast-iron parts and the flue pipes are painted with heat-resistant paint. During the 1st start-up the paint is dried up by the ensuing temperature and in the process dries. This leads to the development of an odour. During this phase, please avoid touching the painted surfaces and ensure that the room is well aired.

For a rapid hardening of the paint we recommend operating the stove on its initial commissioning for 3-4 hours at the highest output level.

Important information for future start ups.

Every Austroflamm pellet stove is fitted in the firebox with high-quality Keramott. Besides its high resistance, this Keramott has the quality of always becoming white again and also remaining white at a correspondingly high firebox temperature. In order to reach the necessary high firebox temperature for the clean combustion of the Keramott, you must operate the pellet stove (e.g. after automatic start up, or when the Keramott is in a heavily fouled and black state) for about 1 hour at the heating output stage (5).

Depending on the quality of the pellets being used and the heating output stage used, the window of the firebox door becomes dirty during operation. The dirt that attaches to the window can be easily wiped away with soft paper when the stove has cooled down. In addition, we recommend occasionally cleaning with Austroflamm glass cleaner.

NOTICE

The firebox, the combustion pot and the firebox door window must in any case be cleaned after the contents of a pellet hopper have been burned

12.1.1 Setting time and date

The time and date are set via the display in the **Settings** menu – under the **Time** or **Date** sub-item. Entry of the current time and date is important. They are requirements for the saved HEATING TIMES working properly and the controls saving in a log the time of any malfunctions that occur. This means that in the event of an error the cause of a problem can be found and resolved.

12.1.2 Setting the fuel quality

The quality of the pellets is governed by a European standard. This standard means that 1 kg of pellets possesses a heat output of min. 4.6 kWh to approx. 5.3 kWh. The wide range of heating output makes it sometimes necessary for your pellet stove to be adjusted to the pellet quality that you use.

This is set via the display. The settings are made by an Austroflamm service technician.

- Fuel quality “1” corresponds to the best possible quality.
- Fuel quality “3” corresponds to the poorest quality.
- Ex factory your pellet stove is set to fuel quality “2”.

12.1.3 Statistics function

Entering the current time and date activates the statistics function in your pellet stove’s controls. The statistics function delivers on request all the data on consumption, operating time, heating output called up and the room temperature reached when the pellet stove is being operated.

This data is displayed for the current day of operation, the past day, the current week, the previous month, the previous 3 months, the previous 6 months, the previous year and from the date of the initial commissioning.

To retrieve the data, the WLAN option in conjunction with the free Austroflamm pellet control APP or an engineer display is required.

12.1.4 Timer function (heating times)

This function can be set by the service engineer using an engineer display or via the optional WLAN module in conjunction with the pellet control APP. A maximum of 6 heating times per week and 3 heating times per day can be set and saved.

Your pellet stove is a model with a closed-bottom combustion pot. It therefore does not have a riddling grate. We therefore recommend only using the timer function sparingly: e.g. 1 timer / day.

Please take into consideration that as soon as the combustion pot bottom is covered with combustion deposits above the height of the ignition hole, the automatic ignition will no longer work. Reliably starting your pellet stove using the timer function therefore requires emptying the combustion pot of residues in good time.

NOTICE

Make absolutely sure that the combustion pot is daily emptied and cleaned after operation. In doing so, special attention must be paid to cleaning the holes in the combustion pot bottom. These must be periodically completely cleaned of dirt. The air for combustion flows through these holes. Your pellet stove will only burn cleanly if these holes are clear.

NOTICE

If at the point of the set timer “Start” the currently recorded room temperature is higher than the set room target temperature, the pellet stove will not switch on. It will only switch on when the room temperature has fallen below the desired room target temperature value.

13 Operation

13.1 Operation using APP and Smartphone

Fig. 11: Apple iOS QR code

Fig. 12: Google Play / Android QR code

Please refer to the manual for your WLAN module for instructions on installing and setting up the data connection, or follow the installation instructions for the Austroflamm PelletControl app.

Download the required “Austroflamm PelletControl” app here and then start:

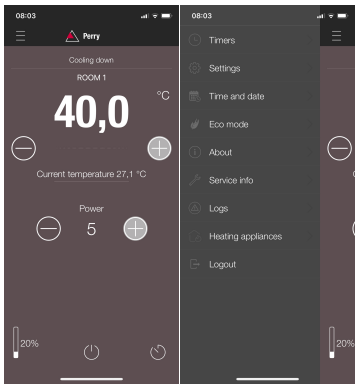

13.2 Operation using the rotary controller



Pellet stove is turned off

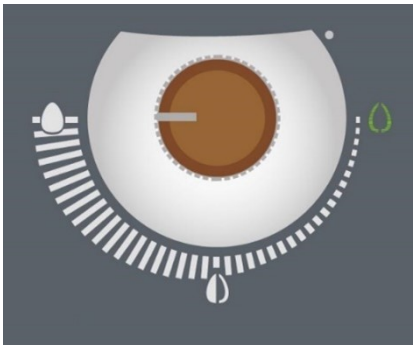

Start phase / flame on the right flashes green

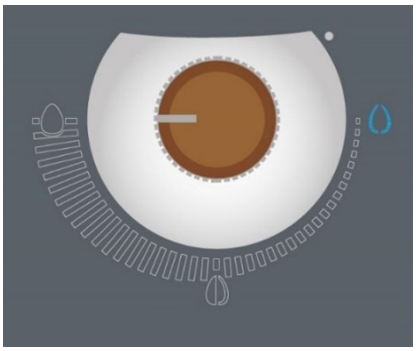

Cool down & standby / flame on the right lights up blue

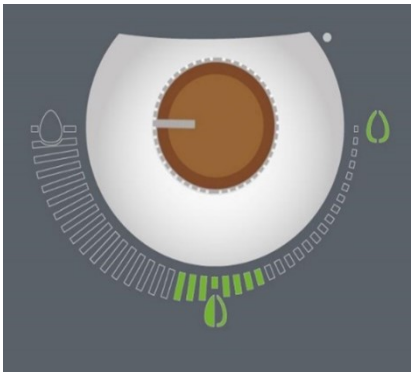

ECO mode standby / flame on the right and output field below flash green

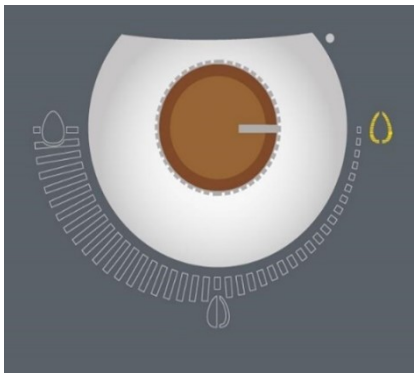

Alarm notification / flame on the right flashes yellow

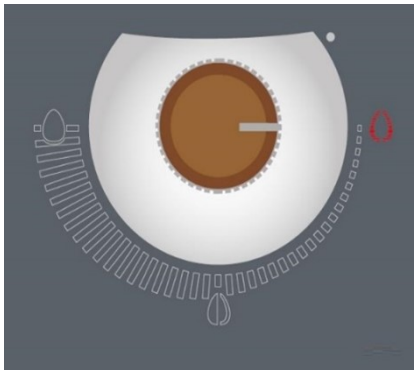

Error notification / flame on the right lights up red

13.3 Starting up the pellet stove

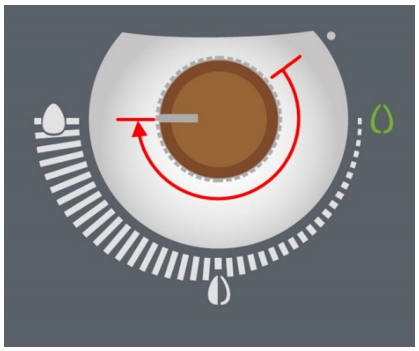

How to start up your stove using the CONTROL KNOB:

Turn the control knob clockwise from the initial position to the stop (= 9 o'clock position).

Fig. 13: start PE

Your pellet stove starts up: The flame on the top right begins to flash green, the display field lights up completely white. This means that your pellet stove is now in the automatic start up phase. This runs fully automatically. In the process the pellets are ignited and the firebox brought to operating temperature. The automatic start up lasts about 10 minutes.

The pellet stove shows the completion of the start up phase with a permanently green-lit flame. With this your pellet stove is ready for your desired output setting.

You can also start up your pellet stove using the **WLAN OPTION** (SMARTPHONE and AUSTROFLAMM PELLET CONTROL APP). To do so however you must position the rotary controller beforehand at least in the 3 o'clock position.

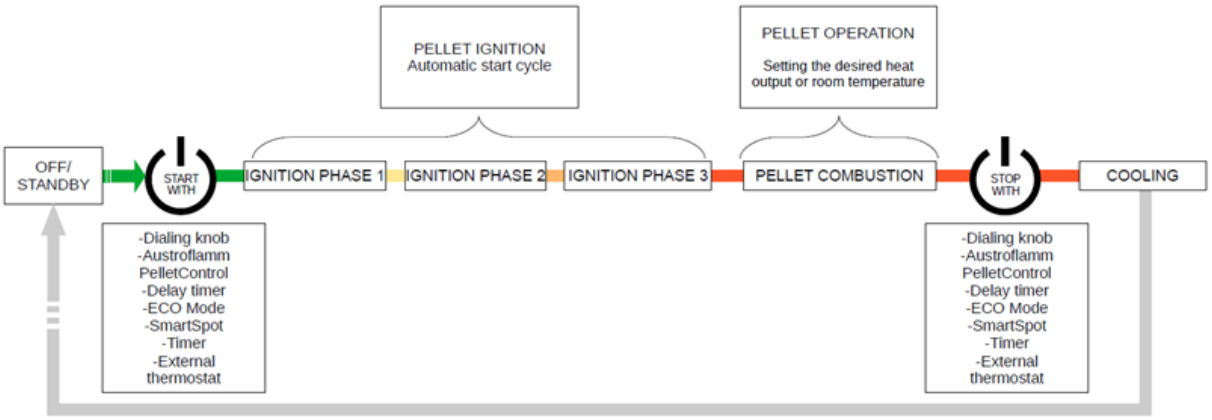

Fig. 14: Functional diagram

NOTICE

We recommend heating the pellet stove for at least 1 hour at stage 5 after the start up phase. For burning off soot and deposits, the lining in the firebox - the Keramott - requires about 400 °C in the firebox. At this firebox temperature the Keramott remains white.

13.4 Wireless room temperature sensor - SMART SPOT

The optionally available SMART SPOT is a wireless room temperature sensor developed by Austroflamm. Your pellet stove can operate with this SMART SPOT in combination with a receiver. It can be positioned at a distance of maximum 10 m (Bluetooth) from your pellet stove. It measures the room temperature at its place of installation and controls the pellet stove output according to the room target temperature that was set. In contrast to external thermostats, the SMART SPOT product works with the modulation and ECO mode functions. This is a big advantage when operating the pellet stove. We therefore recommend this product for controlling the heat output.

SMART SPOT is optional, and available in neutral white and a high-quality wood- or aluminium design.

Installation of the SMART SPOT in conjunction with the receiver must be carried out by an authorised Austroflamm service engineer.

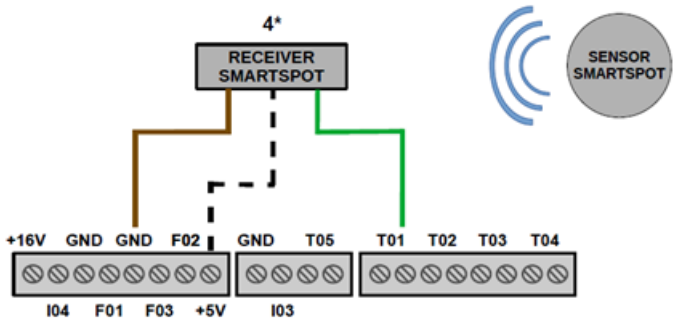

Fig. 15: Smart Spot receiver

13.5 External thermostat

The pellet stove can optionally also be controlled by an external thermostat.

The external thermostat is connected to the main control at outputs “I03” and “GND”.

The 2-pin plug required for this is optionally available from your Austroflamm dealer.

Connection of the external thermostat must be carried out by an authorised Austroflamm service engineer. Only potential-free contacts may be connected.

Activation is exclusively via the Service Technician Display.

IMPORTANT: After installation of the external thermostat the pellet stove must be manually started up in order to enable the “External thermostat” function.

The external thermostat starts up / stops your pellet stove after reaching and falling below the desired room target temperature with a delay of 10 seconds.

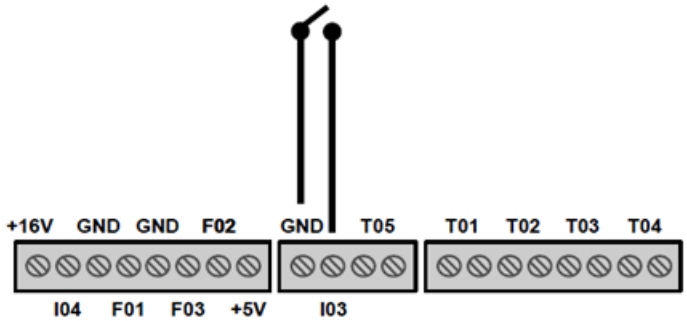

Fig. 16: External thermostat

14 Settings

14.1 Setting the desired heat output and room temperature

In order to switch between the setting for “Heat output” and “Room temperature”, during stove operation turn the control knob anticlockwise as far as the “OFF” position and immediately again clockwise to the desired position.

The display switches the colour from “white” - heating output display - to “Magenta” - room target temperature display.

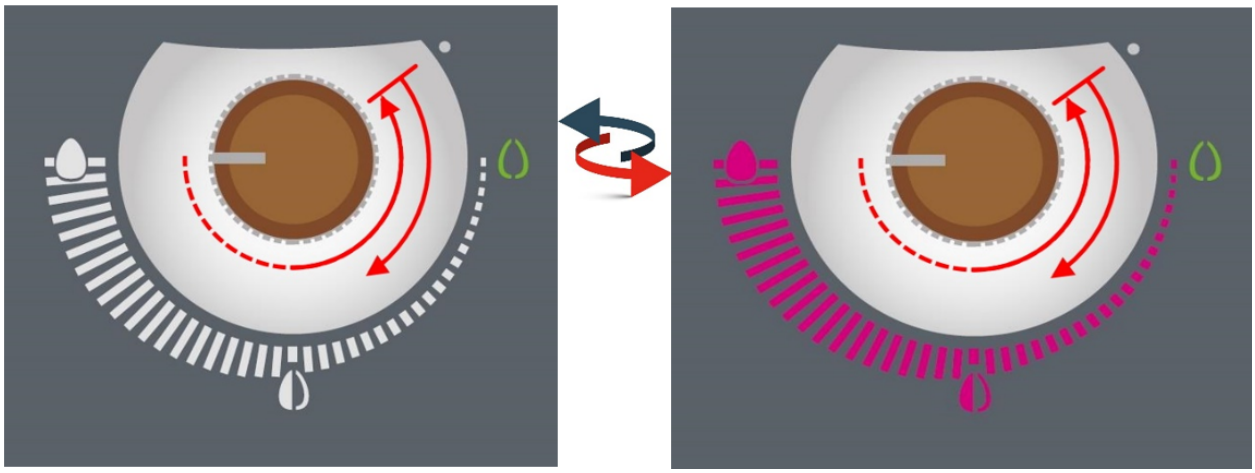

ATTENTION: This function is only possible during stove operation.

14.2 Setting the heat output - 5 stages

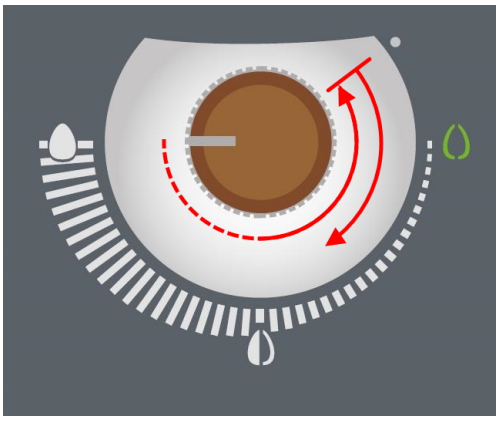

The heat output can be set at 5 stages.

To do so, simply turn the control knob to the desired output stage. The indicator field shows the desired output stage. After the output stage has been set, your selection is confirmed after approx. 5 seconds with a short flashing.

Heat output stage 1-5



Heat output stage 1



Heat output stage 2



Heat output stage 3



Heat output stage 4

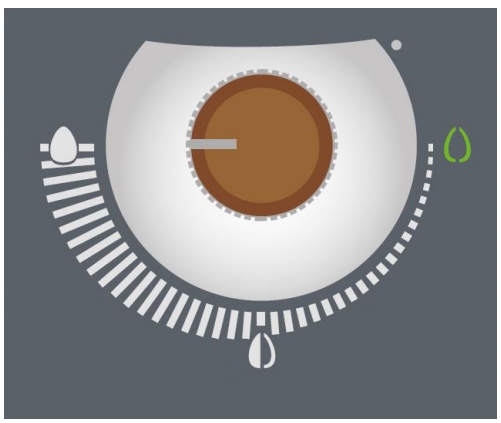

Heat output stage 5

14.3 Setting the room temperature

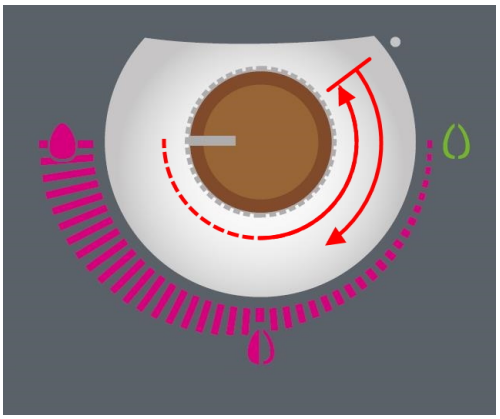

Setting the room temperature is possible in a range from +5 °C (anti-frost) to +40 °C. After the desired room temperature has been set, your selection is confirmed after approx. 5 seconds with a short flashing.

An accurate display of the temperature is not possible on the stove. Set the temperature as you think best.

The room temperature measurement can also be measured with an optional wireless **SMART SPOT** from AUSTROFLAMM or an external thermostat. Your AUSTROFLAMM SPECIALIST DEALER will be happy to talk to you about both products.

Room temperature 5 °C - 40 C



Range 1: 5°C



Range 2: 16 - 19 °C

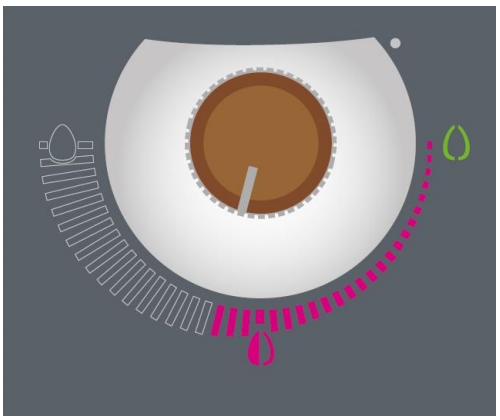

Range 3: 20 - 23 °C

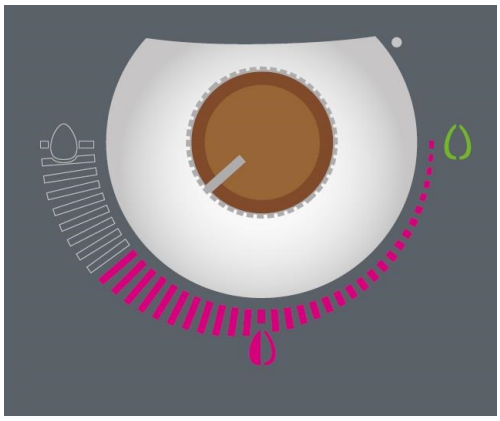

Range 4: 24 - 27 °C

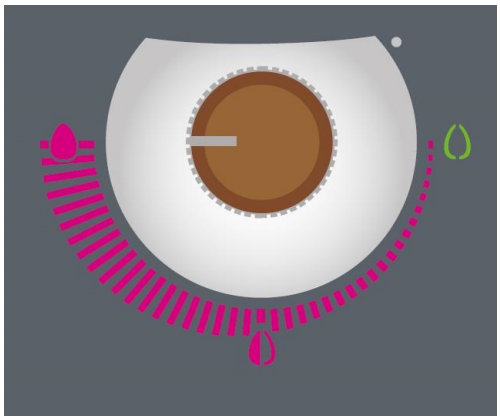

Range 5: 30 - 40 °C

14.4 Adjusting the firebox door

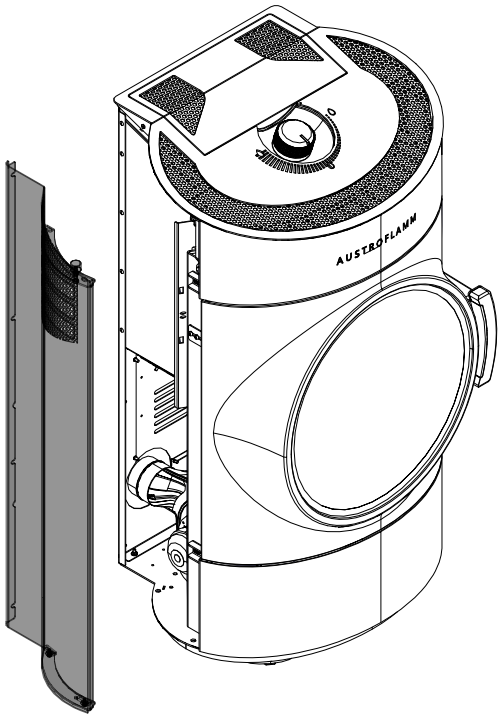

Fig. 17: Removing the side cladding

1) Detach left-hand side cladding. Proceed as described in the section Removing the side cladding [▸on page 79].

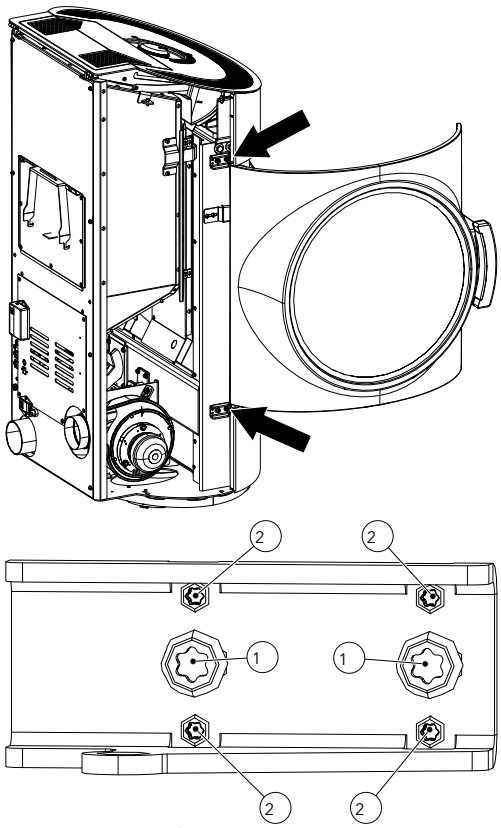

Fig. 18: Door adjustment screws

2) The door can be adjusted on the screws.
3) Using the screws (1) the door can be adjusted up, down, left and right.
4) Using the grub screws (2) the door can be adjusted in and out.

14.5 Adjusting the door lock

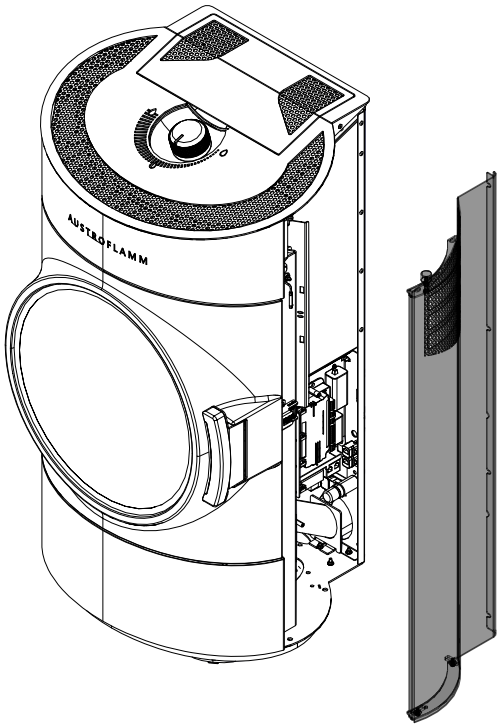

Fig. 19: Removing the side cladding

1) Detach right-hand side cladding. Proceed as described in the section Removing the side cladding [▸ on page 79].

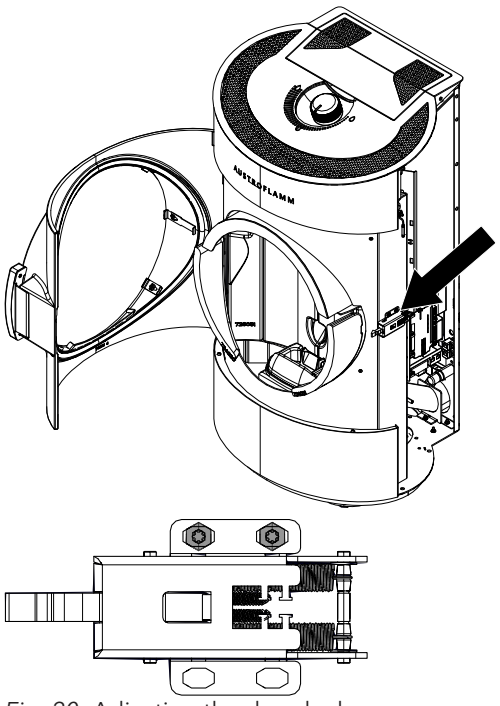

Fig. 20: Adjusting the door lock

2) Open the door.
3) Using the marked screws, the door lock can be adjusted upwards, downwards, forwards and backwards.

15 Maintenance

15.1 Intervals

Servicing falls due after a number of hours specific to the appliance has been reached, but at least 1x annually in order to GUARANTEE THE WARRANTY , otherwise, the warranty claim will be void.

NOTICE

Only carry out maintenance when the pellet stove is cold and currentless.

Cleaning- and maintenance intervals depend on the operating hours and connection situation.

Cleaning the viewing window	as necessary
Visual inspection of riddling grate, remove adhering deposits	every 2-3 operating days
Empty the ash box and clean the firebox	as necessary
Clean the exhaust gas pipes	1 x annually or when display shows due for service
Cleaning screw shaft, pellet hopper	min. 1 x annually or when the pellet supply is visibly reduced and the STB turns off the heating appliance.
Replace the battery	Recommendation: every 2 years
Check all seals (door, heat exchanger lid, ash box, hopper lid); replace as necessary.	1 × annually

The pellet stove and its parts must be cleaned in compliance with the above overview.

Have your pellet stove inspected and maintained annually before the start of the cold season by an Austroflamm engineer.

15.2 Changing the storage battery

A CR2032 battery is located in the control unit. This battery enables the control unit to save certain data - e.g. time, date, heating times etc. even during a power failure, or when the mains power supply is disconnected.

If the battery is flat, the control unit will continue to function normally. However, in the event of a power failure, the above-mentioned data will be lost. These data must then be saved afresh.

Change the battery every 2 years!

1) “ON” switch. Control systems must remain switched on, as otherwise the data will be lost.

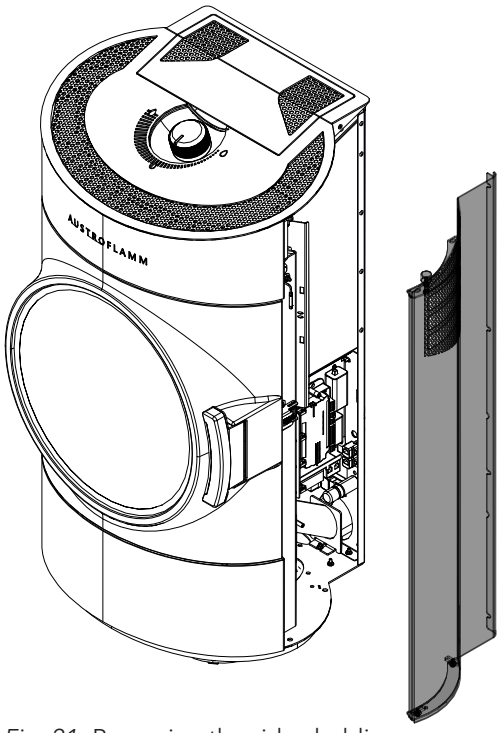

Fig. 21: Removing the side cladding

2) Detach right-hand side cladding. Proceed as described in the section Removing the side cladding [▸ on page 79].

3) The battery is located on the central control unit. To replace it, remove the control unit cover by undoing the screws.
4) Use insulated pliers or a similar tool to remove the old battery from the holder.
5) Insert the new battery, taking note of the correct polarity.
6) Screw the cover of the control unit back on.
7) Remount the right-hand side cladding.
8) Close and screw down the inspection cover.

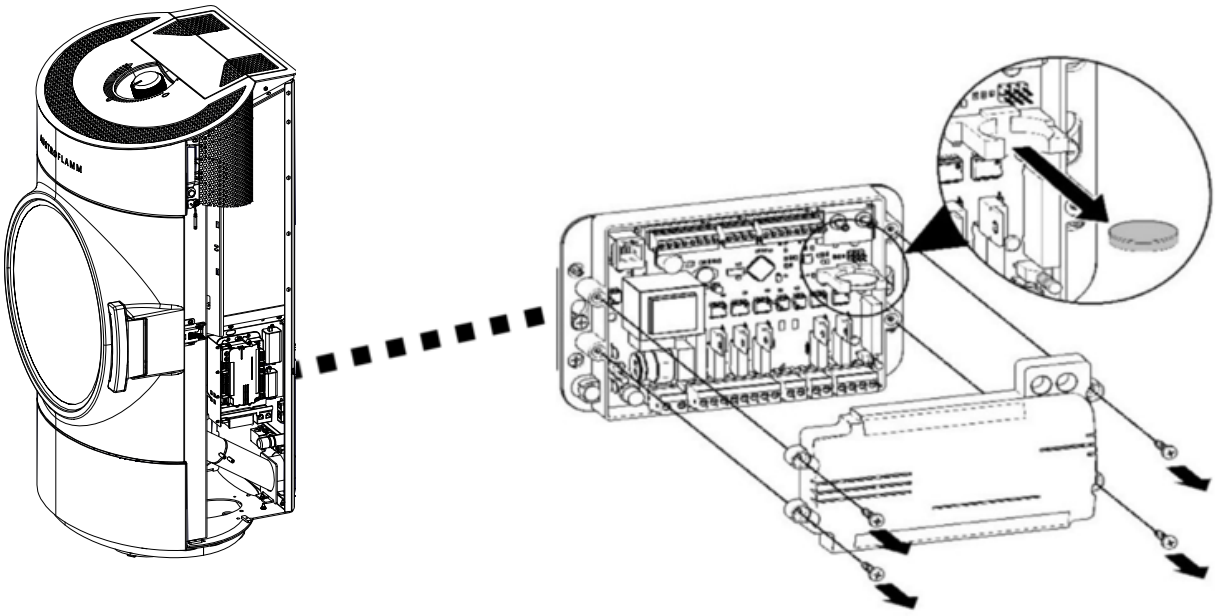

Fig. 22: Changing the storage battery

15.3 Service due

Your pellet stove must be regularly maintained. The requirement to be serviced is determined by a built-in operating hours counter. The hours of operation performed can be read off via the engineer display of your Austroflamm service engineer or via the optional WLAN module with the pellet control APP.

After the maintenance-free operating time has run out you will receive the alarm message **A002**. After the appearance of this alarm message the pellet stove may continue to be operated for a short time. However, call your authorised Austroflamm service engineer promptly for the purpose of carrying out the required service. As part of the service the hybrid stove is thoroughly cleaned and the operating hours counter rest to 0.

16 Cleaning

16.1 Cleaning the pellet stove, flue gas paths and flue pipe

The pellet stove, the flue gas paths and flue pipes should be annually if not even more often, e.g.

- after the chimney has been cleaned,
- checked for deposits and
- cleaned as necessary.

To clean the inner compartment, ash and soot residues must first be removed. Coarse dirt and ash residues must be manually removed with a shovel and a brush or an ash vacuum cleaner. A dedicated ash vacuum cleaner is particularly suitable for removing ash residues.

Alternatively, there is the option of sucking up the ash using an ash filter that can be connected to a standard vacuum cleaner.

TIP

The chimney must likewise be regularly cleaned by the chimney sweeper. Your master chimney sweep will inform you of the necessary intervals. The pellet stove should be inspected annually by a specialist

NOTICE

Carry out any cleaning work while the pellet stove is in the cold state.

16.2 Stove models with combustion pot

The combustion pot of your pellet stove must be emptied before each initial operation. Only a cleaned combustion pot can guarantee secure ignition when starting up and clean combustion when operating.



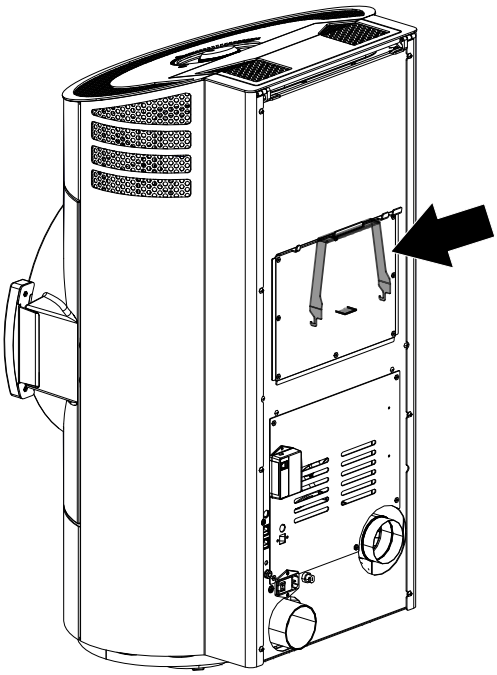

Fig. 23: Lifting tool

The combustion pot can be easily and safely removed using the lifting tool supplied with the stove. The lifting tool is located on the rear of the stove.

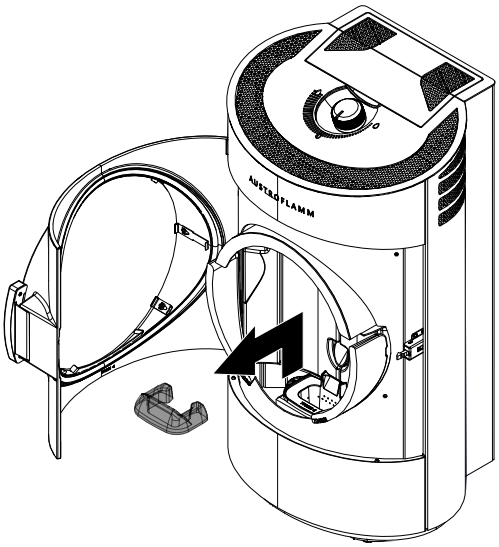

Fig. 24: Removing the front floor

1) Open the door.
2) Remove front floor.

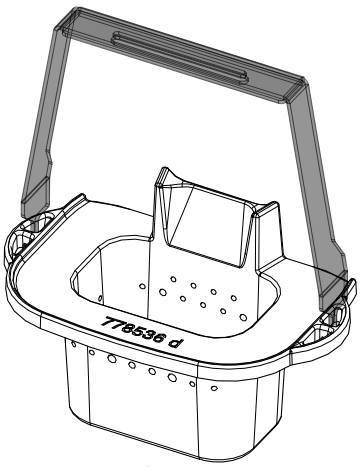

Fig. 25: Combustion pot

3) Fit the lifting tool to the combustion pot and remove combustion pot for emptying.
4) Empty the combustion pot appropriately and reinsert it.
5) Remount the front floor.

16.3 Vacuuming the firebox and combustion pot

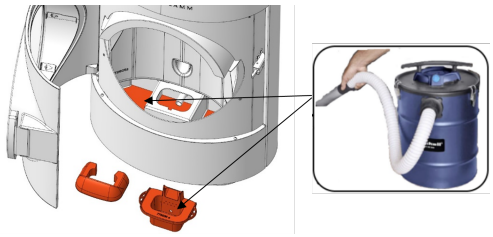

Fig. 26: Vacuuming the firebox and combustion pot

1) Take out the front floor and the combustion pot.
2) Vacuum the firebox and combustion pot with an ash vacuum cleaner.

16.4 Cleaning the exhaust gas pipes

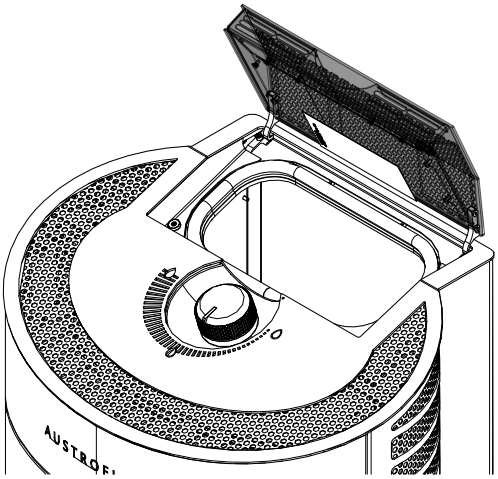

Fig. 27: Opening the hopper lid

1) Open hopper lid.

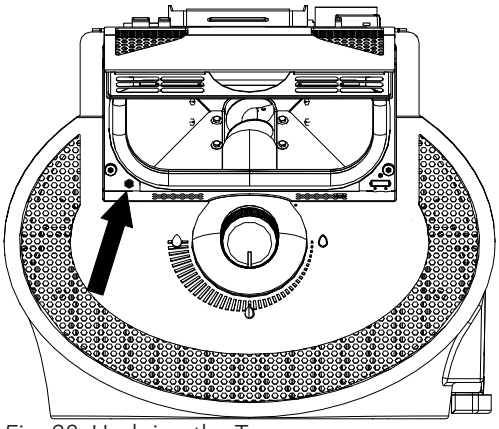

Fig. 28: Undoing the Torx screw

2) Undo the Torx screw.

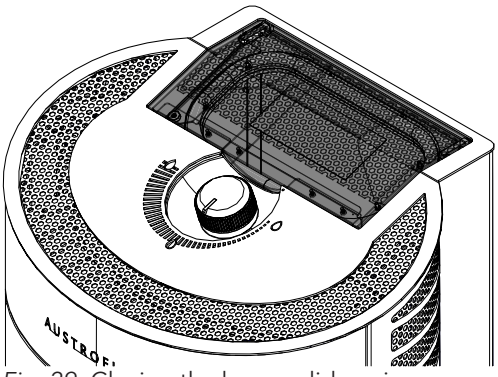

Fig. 29: Closing the hopper lid again

3) Close hopper lid again.

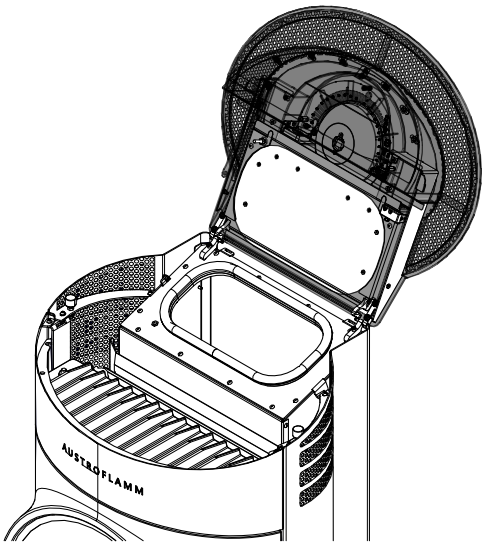

Fig. 30: Lifting up the inspection cover

4) Lift up inspection cover.

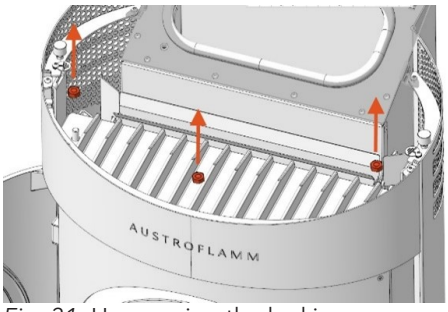

Fig. 31: Unscrewing the locking screws

5) Unscrew the locking screws of the firebox cover.

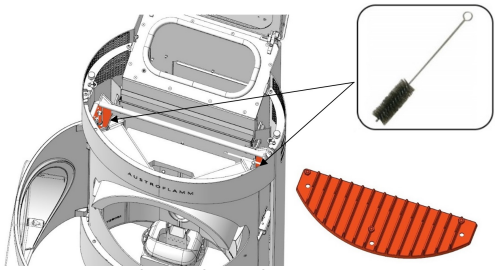

Fig. 32: Brushing the exhaust gas pipes

6) Remove the cast iron top plate and brush the exhaust gas pipes downwards with a brush.

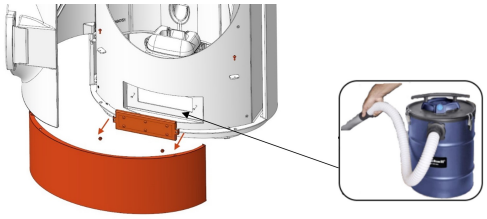

Fig. 33: Vacuuming the flue gas area

7) Remove lower trim and the flush-mounting cover.
8) Vacuum the flue gas area with an ash vacuum cleaner.
9) Reattach everything in reverse order.
10) When mounting the inspection cover ensure that the Torx screw is not completely tightened. It can be somewhat looser.

16.5 Cleaning the door window

During cleaning and maintenance, the glass must also be cleaned. If it is not regularly cleaned then the soot particles may end up being burned in. This makes regular maintenance all the more important.

- We recommend cleaning the glass with our Austroflamm glass cleaner or a commercially available window cleaner.
- Spray window with glass cleaner and leave it for a moment to take effect.
- Use a cloth or kitchen paper to wipe off.

- Prevent door- or window seals from coming into contact with water or cleaner, since these will otherwise harden and in doing so lose their function. Only intact seals ensure that your fireplace insert functions flawlessly.

This will damage the pane
Abrasive cleaning agents or coarse scouring cloths should not be used for cleaning as the glass as they can cause scratching. This does not only affect the appearance, but at the same time light dust and dirt can also accumulate in the scratches.

16.6 Cleaning the surfaces/body

Body

- The body can be cleaned with a dry or slightly damp cloth.
- Use of alcohol- or solvent-based cleaning products is to be avoided. The body is sealed with a special varnish and can be damaged by these.

Various surfaces

- Varnished surfaces may only be cleaned with a soft cloth (damp if necessary).
- For stainless steel surfaces there are special cleaners.
- Soak up dissolved dirt with absorbent cloths or household paper.

Ceramic cladding

For cleaning ceramic cladding, only a cleaning agent with a pH value between 5.0 and 9.0 may be used. Cleaning must be carried out with a soft cloth. Scrubbing sponges can damage the varnish.

- Weakly acidic cleaning agents (pH value below 7.0) are suitable for removing limescale deposits.
- For regular cleaning use neutral cleaning agents (pH value 7.0).
- Weakly alkaline cleaning agents (pH value above 7.0) are effective against grease- and dirt deposits.

17 Help

17.1 List of alarms and errors

Alarms are displayed on the control panel in yellow. Flame on the right glows yellow. When an alarm is displayed the pellet stove can continue to be used.

Warning code	Description	Possible cause	Solution
Alarm - A001 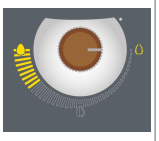	Fuel level low	1. The fuel level is low. 2. The filling level indicator was not reset to “FULL” after topping up.	Top up pellets, after which the alarm must be reset by quickly pressing the “Reset button” several times.
Alarm - A002 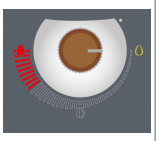	Maintenance required		Maintenance by service engineer required.
Alarm - A004 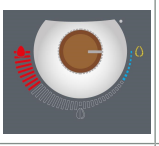	Storage battery dead	The storage battery has been used for more than 2 years and not replaced.	Change control storage battery (CR2032). The battery must be changed every 2 years as part of a service.
Alarm– A006 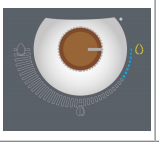	Pellet hopper lid open		Close pellet hopper lid.

Errors are displayed in red. Flame on the right glows red. When errors are displayed, the pellet stove is not ready for operation.

Error code	Description	Possible cause	Solution
Error - E004 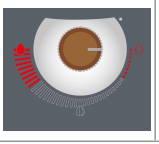	Communication error	Communication error between controls and rotary controller	Check data cable plug connections on the rear of the stove.

Error code	Description	Possible cause	Solution
Error - E101 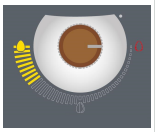	Ignition phase 3 failed	1. The pellet hopper is empty. 2. Lower-quality or old pellets. 3. The screw conveyor is blocked. 4. Firebox temperature sensor faulty or incorrectly connected.	ATTENTION: Only carry out when stove is cold! 1. Check whether there are pellets in the pellet hopper and in the screw conveyor, and top up pellets if necessary. 2. Replace the pellets. 3. Please contact your Austroflamm dealer. The screw conveyor needs cleaning. 4. Please contact your Austroflamm dealer. The firebox temperature sensor must be replaced or correctly connected. Empty the combustion pot, reset the error and restart the stove. Should the error persist, please contact your Austroflamm dealer
Error - E102 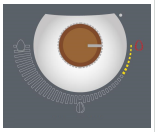	Automatic ignition failed Negative pressure too low	1. The automatic Ignition has been manually cancelled. 2. Leakage on the pellet stove. 3. Supply air pipe, combustion pot, riddling grate, flue gas paths or flue pipe contaminated. 4. Negative pressure too low. 5. The exhaust gas fan is defective, disabled or contaminated.	**ATTENTION**: Only carry out when stove is cold! 1. Empty the combustion pot, reset the error and restart the stove. 2. Check whether the firebox door and ash box door are properly locked, whether the pellet hopper lid is closed and whether the seals are worn or damaged. 3. The affected components must be cleaned. 4. Please contact your Austroflamm dealer. 5. Please contact your Austroflamm dealer. Empty the combustion pot, reset the error and restart the stove. Should the error persist, please contact your Austroflamm dealer.
Error – E105 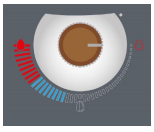	Software error		Please contact your Austroflamm dealer. The software must be reinstalled.
Error – E106 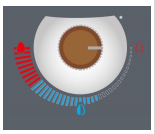	Software error		Please contact your Austroflamm dealer. The software must be reinstalled.

Error code	Description	Possible cause	Solution
Error – E107 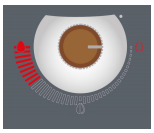	Firebox temperature sensor defective	Firebox temperature sensor faulty or incorrectly connected.	Should the error persist, please contact your Austroflamm dealer. The firebox temperature sensor must be replaced or correctly connected.
Error - E108 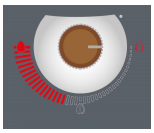	Safety temperature limiter triggered or defective		Please contact your Austroflamm dealer to find out why the STL has been activated.
	Broko triggered (mandatory for multiple occupancy)		In this case contact the Broko manufacturer (www.broko.de) or your authorised specialist dealer.
Error - E109 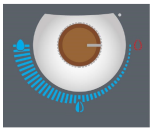	Riddling grate not closed		Check and clean the riddling grate. Should the error persist, please contact your Austroflamm dealer
Error - E110 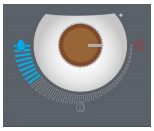	Room temperature sensor defective	Room temperature sensor faulty or incorrectly connected.	Should the error persist, please contact your Austroflamm dealer.
Error - E113 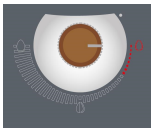	Firebox temperature too high	Exhaust gas fan and flues are blocked.	**ATTENTION**: Only carry out when stove is cold! The affected components must be cleaned.
Error - E114 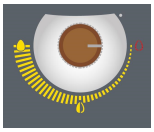	Ignition phase 2 failed Firebox temperature too low	1. The pellet hopper is empty. 2. Lower-quality or old pellets. 3. The screw conveyor is blocked. 4. Firebox temperature sensor faulty or incorrectly connected.	**ATTENTION**: Only carry out when stove is cold! 1. Check whether there are pellets in the pellet hopper and in the screw conveyor, and top up pellets if necessary. 2. Replace the pellets. 3. Please contact your Austroflamm dealer. The screw conveyor needs cleaning. 4. Please contact your Austroflamm dealer. The firebox temperature sensor must be replaced or correctly connected. Empty the combustion pot, reset the error and restart the stove. Should the error persist, please contact your Austroflamm dealer.
Error - E115 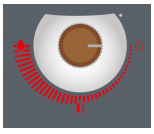	Software error or controls defective		Please contact your Austroflamm dealer. The software must be reinstalled or the controls must be replaced.

17.2 Resetting the alarm and error messages

Alarm message

On alarm messages the flame on the top right lights up / flashes yellow. The alarm message must be traced and the cause resolved. For deleting a filling level alarm there is a RESET button (see illustration). The reset button is accessible underneath the hopper lid.

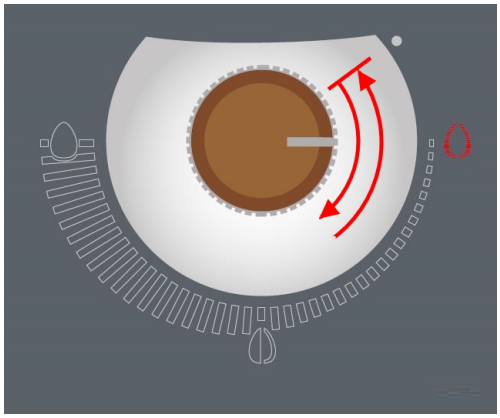

Error message

When an error occurs the pellet stove will stop. And the flame at the top right lights up red. In addition, one or more output fields will light up in different colours, depending on the error. By using the image, you can quickly identify the error. Errors displayed can be deleted with the rotary controller after the source of the error has been resolved. To do so the rotary controller must be moved clockwise from the OFF position to any output stage and immediately back to the OFF position.

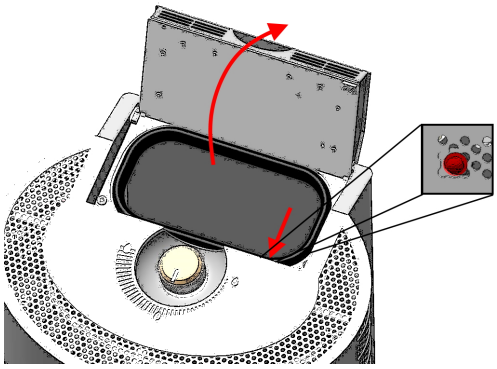

Reset button

The reset button is accessible on the front right after the hopper lid has been opened. The reset button allows the filling level be acknowledged. To do so the reset button must be quickly be pressed 3-4 x in succession

You will also need this button for filling the screw shaft at the initial commissioning and after cleaning the screw shaft. For this function, keep the button held down for as long as the screw is required to work.

17.3 Filling level indicator

The filling level indicator is calculated by the control system software on the basis of the size of the pellet hopper and the burning time. The correct function is only given if when topping up the hopper is always filled up and the level counter is reset at the same time.

To set the level counter to FULL, press the reset button several times quickly in succession.

This function can be disabled by the service engineer using the ENGINEER DISPLAY or in “Settings/ Fuel” on the Austroflamm PelletControl APP.

17.4 Safety temperature limiter

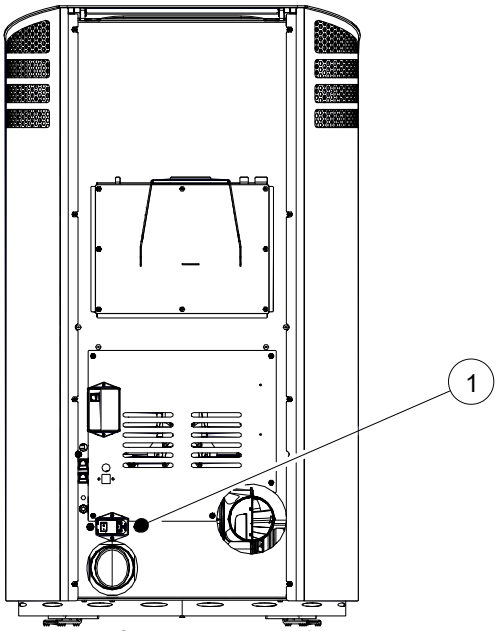

Fig. 34: Safety temperature limiter

Your pellet stove is fitted on the back with a safety temperature limiter (1). This automatically switches the pellet stove off when the screw shaft overheats. If this happens, the cause of the overheating must be determined and resolved. After this the pellet stove can be made ready for operation again by pressing the green reset pin in the safety temperature limiter. The green pin is located below a black cylindrical protective cap. This must be unscrewed beforehand.

17.5 Firebox lining

The lining of your pellet stove consists of Keramott, a high-quality material with special combustion properties and an attractive appearance. During or after operation this lining may have superficial hairline cracks, which do not however affect functioning. Replacement of such parts is not required!

17.6 What to do in the event of a chimney fire

If fuel used is incorrect or too moist, then due to deposits in the chimney this may lead to a chimney fire.

1) Call the fire department and the district master chimney sweep!
2) Turn off the pellet stove as normal via the rotary controller.
3) Enable access to the cleaning openings (e.g. basement and attic).
4) Remove all flammable material from the chimney.
5) Inform your district master chimney sweeper before recommissioning your pellet stove and have your chimney checked for any damage.

17.7 What to do in the event of faults

Should faults occur, your dealer will require the following details:

- Serial number and appliance model as per the type plate
- Original invoice (date of sale)
- Start-up log

18 Electrical connection

NOTICE

Repairs to your pellet stove must only be carried out by authorised Austroflamm engineers.

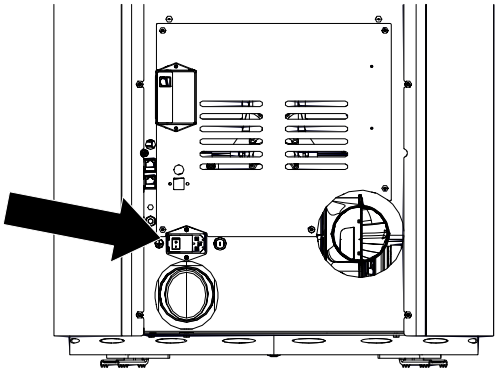

Fig. 35: Fuse holder with T2.5A glass tube fuses

Your pellet stove is designed for connection to a 230 V / 50 Hz mains. The connection cable is included.

The mains socket connection is located on the rear of the appliance and is protected with a T2.5 A glass tube fuse.

The power consumption of your pellet stove is visible on the nameplate.

Electrical diagrams can be found directly on the homepage in the download section of each pellet stove.

19 Disassembling

For correct uninstallation and dismantling of the pellet stove, contact your Austroflamm specialist dealer.

19.1 Removing side cladding

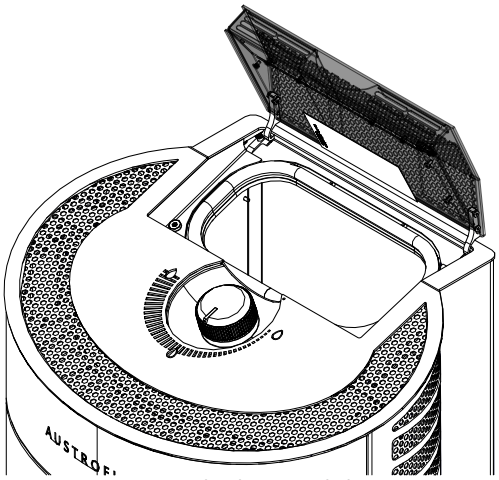

Fig. 36: Opening the hopper lid

1) Open hopper lid.

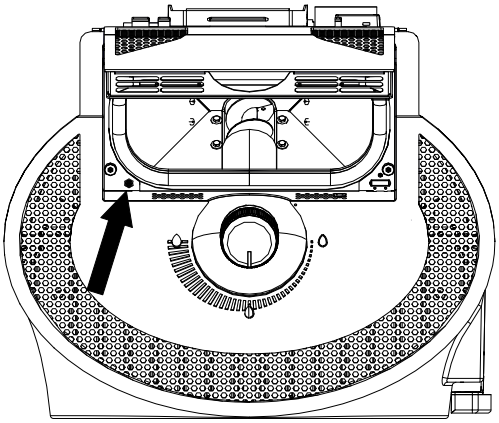

Fig. 37: Undoing the Torx screw

2) Undo the Torx screw.

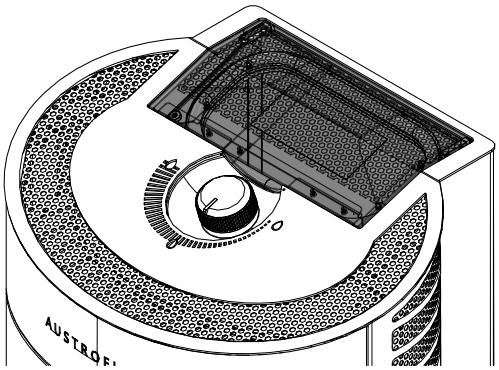

Fig. 38: Closing the hopper lid again

3) Close hopper lid again.

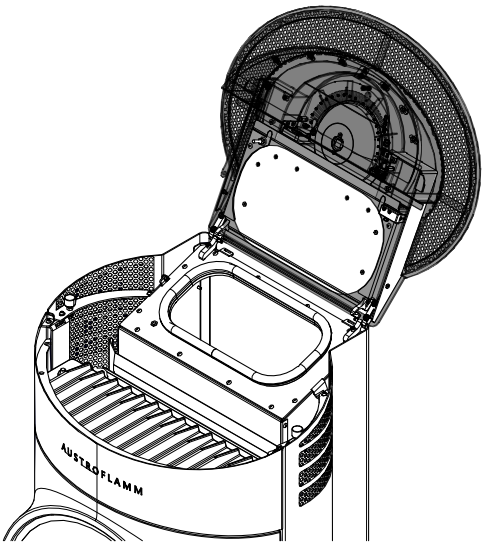

Fig. 39: Lifting up the inspection cover

4) Lift up inspection cover.

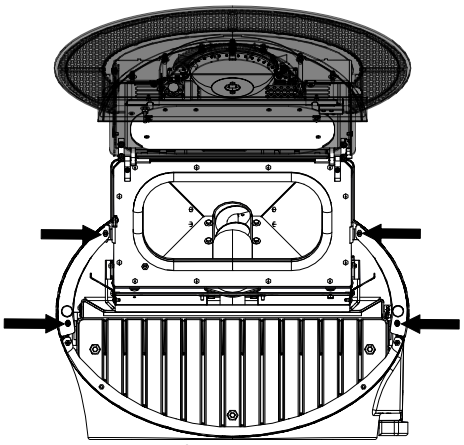

Fig. 40: Loosening the screws

5) Loosen the marked screws on the left and right of the side cladding.

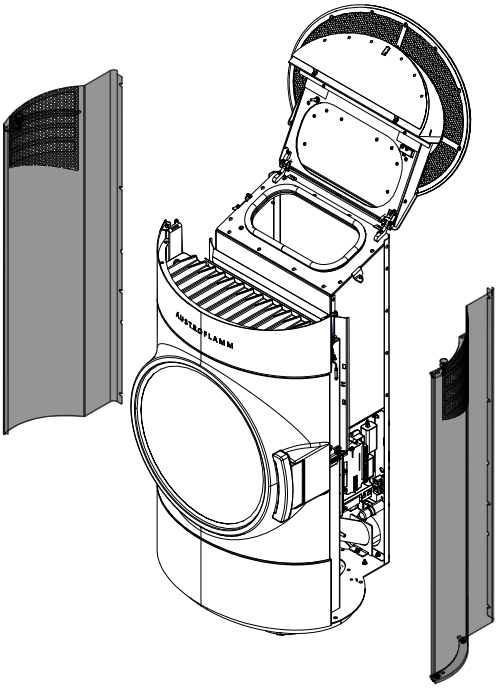

Fig. 41: Removing the side cladding

6) Detach side cladding.
7) When subsequently mounting the side cladding in reverse order, note that the Torx screw is not to be completely tightened. It can sit somewhat looser.

20 Accessories

Have defective parts (accessories, spare parts) replaced by your specialist pellet stove dealer. This guarantees that your pellet stove is and remains safe and functional.

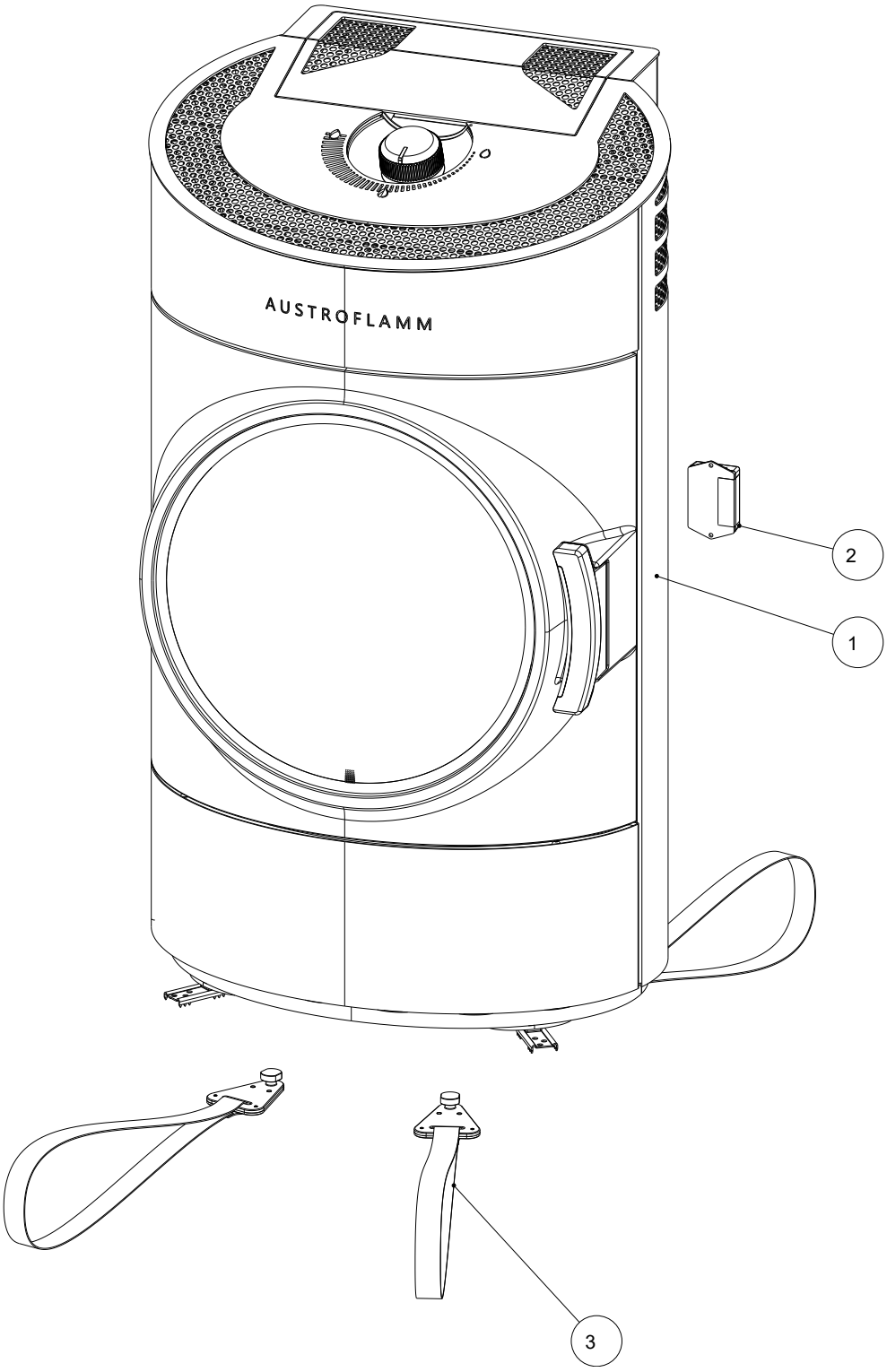

Item	Qty	Article	Article no.
1	1	CLOU Pellet 8kW 2.0	803101
2	1	WiRCU box, complete	800012
3	4	transport aid, complete	361224

21 Spare parts

Spare parts can be ordered through our dealers.

For ordering spare parts, it is necessary to provide the type plate picture or data from the type plate of your pellet stove. This guarantees proper spare parts for your specific pellet stove.

22 Disposal

NOTICE

To dispose of the pellet stove properly, get in touch with the local (possibly municipal) waste disposal company.

NOTICE

We recommend that you remove those components of the pellet stove which have been in contact with fire such as window, combustion chamber, cast iron components, grates, firebox lining (Keramott), ceramic, sensors and baffle plates and dispose of them in the household waste.

NOTICE

For correct uninstallation and dismantling of the pellet stove, contact your Austroflamm specialist dealer.

Electric and electronic components

Remove the electric and electronic components from the appliance by dismounting them. These components must not be disposed of via non-recyclable waste. Disposal should be carried out professionally via the electrical and electronic waste return system.

Keramott

Remove Keramott components. If present, fastening elements must be removed beforehand. Keramott components that have been in contact with fire or flue gas must be disposed of. Reuse or recycling is not possible. Local disposal options must be observed.

Steel sheet

Disassemble steel-sheet components of the appliance by mechanical crushing. If present, remove seals beforehand. Dispose of steel sheet parts as metal scrap. Local disposal options must be observed.

Cast iron

Disassemble cast-iron components of the appliance by unscrewing or flexing them from one another, or alternatively by mechanical crushing. If present, remove seals beforehand. Dispose of the cast-iron parts as metal scrap. Local disposal options must be observed.

Natural stone

Mechanically remove any natural stone present from the appliance and dispose of it as construction waste. Local disposal options must be observed.

Fittings etc. (for water-carrying appliances)

Disassemble the components for carrying water by unscrewing and removing them and dispose of them as metal scrap. Local disposal options must be observed.

Seals (glass fibre)

Mechanically remove the seals from the appliance. These components must not be disposed of via non-recyclable waste.as glass fibre waste cannot be destroyed through burning. Dispose of seals as glass- and ceramic fibre waste (artificial mineral fibres (AMF)). Local disposal options must be observed.

Handles and decorative elements made of metal

If present, disassemble or remove handles and decorative elements made of metal and dispose of as metal scrap. Local disposal options must be observed.

23 Warranty and guarantee

1. Warranty statement

For your AUSTROFLAMM hybrid stove, we guarantee the flawless performance of the body for six years, and of all other steel and cast iron components for two years from the date of first sale.

Steel and cast-iron parts that manifest material- and or processing defects during the guarantee period (warranty case) will be replaced for new parts provided that the warranty case has been asserted to the best of the holder's knowledge within the statutory warranty period. Functional problems with electronic accessories (e.g. WLAN+ SmartSpot) shall only justify a warranty claim for the particular accessory.

Our warranty only covers the free delivery of the new parts: work- and travel times are not recorded.

2. Exceptions

We do not provide a guarantee on wear parts (e.g. Keramott, seals and grate or combustion cavity, ignition cartridge, temperature sensor, flange bearing), surface coatings, varnish, glass and ceramics. In the case of such defects no warranty case has occurred.

When heating up, during operation and when cooling down, your hybrid stove may produce some noise (crackling, soft clicking, etc.). This is caused by the various materials expanding and contracting under the influence of temperature in your pellet stove. Noise of this kind does not constitute a warranty claim and do not constitute a warranty claim.

The territorial scope of validity of our guarantee covers Austria and Germany. In all other countries, separate conditions of the importer apply to the respective country. No warranty case occurs if your Austroflamm pellet stove is not located within the territorial scope of validity, which does not change if it is transported or dispatched by Austroflamm."

3. Requirements

A warranty case shall only then be replaceable if your Austroflamm pellet stove has been operated, maintained, installed and commissioned by a specialist authorized by Austroflamm or directly by Austroflamm Serivce, all in compliance with the user handbook. For the replaceability of the warranty case the start-up log must be received by Austroflamm within one month at the latest of the initial commissioning. In order to make a claim on the warranty, repairs to your pellet stove must only be carried out by a service engineer authorized by Austroflamm.

The warranty claim is asserted with the invoice and serial number with the Austroflamm specialist dealer via whom the purchase was made. An unjustified warranty claim will be charged back to you.

Servicing falls due after a number of hours specific to the appliance has been reached, but at least 1x annually in order to GUARANTEE THE WARRANTY , otherwise, the warranty claim will be void.

4. Guarantee

This guarantee does not affect your statutory warranty rights towards us. Should your Austroflamm pellet stove already be defective at the point of handover, you can always connect us within the framework of the statutory warrant regardless of whether there is a warranty claim or the guarantee is claimed.

24 Start-up log

Operator / Customer	Dealer / Engineer
Name	Company
Street	Street
Town and postal code	Town and postal code
Telephone	Telephone
Email	Email

Pellet stove		
Model	Control software version	
Serial number	Control panel software version	
Technical defects	WLAN Box software version	
Visual defects	WLAN module [ ] yes [ ] no	
Accessories / defects (SmartSpot, air distribution module, etc.)		

On-site conditions	
Socket earthed (see electric installation test certificate)	Number of elbows:
	Total length of flue pipes:
Type of chimney: [ ] brick [ ] stainless steel [ ] firebrick	Flue pipes in plug-in system [ ] with seal lip [ ] without seal lip
Chimney diameter: _____chimney flue height: _____	Sea level:
Chimney flue – Approved by chimney sweep: [ ] yes [ ] no	Chimney flue-/draught: Actual value:_____ Target value: 3-12 Pa
Controlled living space ventilation [ ] yes [ ] no	Flue pipe diameter:
Other:	Outside temperature for draft measurement:

Appliance – Preparation for Start, Functional Check			
Pellet hopper loaded		Induced draught fan function tested	
Pellet quality: e.g. OE standard, DIN plus, ENplus A1		Screw motor function tested	
Riddle grate function tested		Ignition cartridge function checked	
Keramott "burnt white" after trial		Partial load test carried out	
Firebox door seal checked [ ] yes [ ] no			

Instructions for Operator / Customer			
Instructions for handling the appliance explained clearly and comprehensibly		Cleaning and maintenance interval explained	
Terms of the guarantee and warranty explained		Photographic documentation of the current status of the "stove installation"–	
[ ] wire brush [ ] glove [ ] user instructions		(Start, combustion and burnout phases carried out.)	
[ ] Maintenance contract requested through Austroflamm		[ ] Maintenance contract requested through specialist dealer	

The end customer confirms that they can now put the stove into operation unassisted. They further confirm, that the stove is in a fully functional state and free of defects.

_____	_____	_____
Place, date	Signature Operator / Customer	Signature Technician

25 Service Report

Date	Technicians	Notes	Work carried out, replacement parts installed

Date	Technicians	Notes	Work carried out, replacement parts installed

Notizen / notes / appunti / remarques

AUSTROFLAMM GMBH
Austroflamm-Platz 1
A- 4631 Krenglbach

Tel: +43 (0) 7249 / 46 443
www.austroflamm.com
info@austroflamm.com

803101-945185