KALFIRE
FIREPLACES

Gi

INSTALLATION INSTRUCTIONS
Balanced flue gas systems

KALFIRE
FIREPLACES

Balanced flue gas system Kalfire Gi

Gi75/59F, Gi80/55C, Gi85/55S
Gi105/59F, Gi110/55C, Gi115/55S
Gi105/79F, Gi110/75C, Gi115/75S
For gastype: G20, G25, G30 en G31

Version 07_2025

CONTENTS

1 General information 6

1.1 Foreword 6

1.2 Pictograms 6

1.3 Warranty 7

1.4 Gi fireplace compatibility 8

1.5 Receipt and verification 8

2 Safety 9

2.1 Safety related to installation 9

2.2 Gas and electrical units already installed 9

2.3 Installation instructions 9

2.4 Safety instructions for decorative filling 11

2.5 Safety related to use 11

2.6 Three safety measures for the gas fire 12

3 Description 13

4 Preparation 14

4.1 Preliminary work with the help of a scale drawing 14

4.2 Chimney calculation 14

4.3 Check the gas fire 15

4.4 Check UTP connection and/or WiFi signal 15

5 Installation 16

5.1 Installing the flue duct and roof pass-through 16

5.2 Placing the gas fire 17

5.3 Connecting the gas fire 18

5.4 Cleaning and testing the gas fire 20

5.5 Gas measurement 20

5.6 Sustainability measurement 20

5.7 Placing the restriction plates 21

5.8 Removing the ceiling plates 21

5.9 Placing and finishing the surround 22

5.10 Placing decorative elements 23

6 Operation Kalfire Gi 24

6.1 Operation options 24

6.2 Pairing the remote control 24

6.3 KalSense ring 25

6.4 Remote control and symbols 25

6.5 Kalfire Connected app 27

7 Maintenance 28

7.1 Maintenance 28

7.2 Door removal 29

7.3 Replacing batteries 30

7.4 Disassembly and disposal 30

8 Annexes 31

8.1 Flue duct configurations 1 through 6 . 31

8.2 Explanation and Applications of Relay Connector 41

8.3 Product card – part 1 42

8.4 Product card – part 2 43

8.5 Configuration of the decorative elements 44

8.6 Technical specifications by appliance . 55

8.8 Country overview 57

8.9 Declaration of conformity 58

1 General information

The following sections provide general information about the gas fire:
- Foreword
- Pictograms
- Warranty
- Receipt and verification

1.1 Foreword

About this manual
This Installation Manual has been written for authorized technicians and contains the information needed to install a Kalfire gas fire. A separate User instruction accompanies this installation instructions. The user instructions should remain in the vicinity of the gas fire so that they are readily available for fireplace users.

The gas fire may only be installed by qualified technicians complying with all relevant national or local regulations. The current technology status, the provisions of the Building & Housing Inspectorate and the national and European regulations should be taken into account with regard to the installation work and the operation of the gas fire once fully connected.

Maintenance and repair work may only be carried out by authorized technical fitters.

Effective use
This gas fire has been designed as ambiance heating and has not been designed to be used as the principal heating unit for part of a house or throughout the house.

De gashaard met afstandsbediening mag uitsluitend gebruikt worden overeenkomstig met het ontwerpdoel en met inachtneming van de installatiehandleiding en gebruikersinstructies.

The gas fire and accompanying remote control may only be used in accordance with the reason it was designed and after review of the Installation Manual and user instructions.

Modifications of whatever nature can also affect the safety of the gas fire. Alterations can nullify the warranty and the technical testing and certification is no longer applicable.

If the gas fire is not installed correctly, all warranty and/or
damage claims against Kalfire will be declared null and void. This gas fire has been tested and approved according to CE standard EN-613. Every gas fire that leaves the factory has been tested for technical and functional adherence to relevant quality standards in force.

This instruction is available in various languages on www.kalfire.com. All translated instructions have been translated from a Dutch instruction, which is the original document.

Disclaimer
All rights reserved. No part of this manual may be copied, distributed or translated into other languages, in full or in part, without the prior written permission of Kalfire. Kalfire reserves the right to make changes to the manual. Kalfire, however, cannot provide any warranty, implicitly or explicitly, for this manual. Any risk is fully for the account of the user.

Copyright © 2023 Kalfire B.V. Geloërveldweg 21, Belfeld, The Netherlands

1.2 Pictograms
The following pictograms are used in this manual;

IMPORTANT!
Warning for explosive material. Mitigate the risk of an explosion by carrying out these instructions carefully in the vicinity of explosive materials.

DANGER!
Warning for flammable material. Follow instructions to ensure that the possibility of fire thanks to the sudden ignition of flammable materials is prevented.

WARNING
General warning. Mitigate the risk of injury by carrying out the instructions carefully.

CAREFUL!
General warning. Mitigate the risk of material damage by following the instructions diligently.

1.3 Warranty

Kalfire products are manufactured with meticulous precision from premium materials. Despite this, should an error or defect become apparent, Kalfire will provide warranty coverage according to the following provisions.

Warranty conditions:

1. The warranty period for Kalfire gas appliances amounts to two years from the procurement date, that must be clearly legible on the proof of purchase.
2. The warranty period of 2 years does not apply to discolouration of the varnish on the flat or design; in this case a warranty period of 1 year applies.
3. Glass and rubber seals are excluded from the warranty.
4. Physical and chemical influences from outside during transport, storage or installation are not covered by the guarantee.
5. The gas fire must be installed by a technician approved by Kalfire according to this Installation Manual and in compliance with all relevant national and regional standards in force.
6. Kalfire assumes no responsibility for errors or defects related to the installation of the gas fire. Placing of the appliance, the quality and material choice of the finished product and a check as to the correct operation of the concentric flue duct system are the responsibility of the fireplace dealer approved by Kalfire.
7. The warranty covers no right whatsoever to compensation in the event that the appliance cannot be used.
8. Should disruption occur within the warranty period caused by a manufacturing error or material defect, Kalfire will deliver the components needed for repair to the installer of the gas fire, without paying compensation for dismantling or assembly.
9. Renewing or replacing components that fall under the scope of the guarantee do not extend the duration of the warranty.
10. Should the Kalfire-approved installer be unable to rectify the problem covered by the warranty, then he is entitled upon his own express desire to request Kalfire to assume responsibility for doing so (only valid in the Benelux, Germany, France and the United Kingdom).
11. Verification or repair of an entire gas fire or parts thereof can only take place by appointment, after prior consultation between Kalfire and the installer approved by Kalfire.
12. A dated proof of purchase must be presented to Kalfire should a possible home repair service (only available in the Benelux, Germany, France and the United Kingdom) be carried out within the warranty period.
13. In the event of home repair service outside the warranty period, material costs, working hours and call-out charges will apply.

The warranty is not applicable in the following circumstances:

1. If the warranty provisions have not been complied with, in part or in full.
2. If alterations to the appliance have been brought about without Kalfire's written permission to do so.
3. If the appliance passes into new ownership.
4. If the appliance has not been fitted according to the Installation Manual and/or has not been used according to the user instructions.
5. Should deviation from the Kalfire specifications have occurred in any way or form during installation of the concentric flue duct system.
6. Should deviation from the Kalfire specifications have occurred in any way or form during configuration of the decorative elements, including possible ceramic wood logs on the burner bed.
7. Damage attributable to external causes (shocks, lightning, falling, flooding or overheating of the appliance) during transport, storage or installation.
8. Should the appliance be impacted by neglect, improper use and/or gross negligence.
9. If the repair or delivery of individual parts be carried out by another manufacturer or by a professional technical fitter who has not been approved by Kalfire.

1.4 Gi fireplace compatibility

You can control the fireplace with an external device (e.g., tablet, phone). This connection can be established by connecting the Gi fireplace directly to the router with a UTP cable or through a wireless WiFi connection. In case the fireplace is connected wirelessly to the home router, in some cases the WiFi connection may not work properly. This may be caused by insufficient coverage (signal) of the WiFi network or because connected devices (w.o. phone, tablet, router) are not compatible.

The Gi fireplace and your external device must be connected to the same router (via the same network). The Wi-Fi signal can be checked beforehand and improved if necessary. Unfortunately, due to the wide variety of devices, compatibility cannot be checked in advance. Compatibility will only become clear after installation of the interface. Kalfire accepts no liability for the failure of the Gi fireplace to function properly or at all due to causes described here.

1.5 Receipt and verification

Verification upon receipt

The gas fire is delivered as a fully-assembled appliance. The appliance is ready for use immediately after installation. Report any damage, missing parts or incorrect deliveries within five working days to Kalfire (according to the supply terms and conditions).

Check the following upon receipt;

1. Check that the packaging has not been damaged.
2. Check the product's glass panels for cracks or breakages.
3. On delivery, report damage caused during transport to the shipper on the packing slip.
4. Check that all parts/accessories have been delivered.
5. Check if the correct product has been delivered.
6. Check if the gas specifications comply with your order form.

Scope of delivery:

- Gas fire
- remote control
- Installation Manual
- User instructions
- Ceramic burner logs
- Ceramic log set and decorative material
- Ember Glow
- Restriction plates
- Power cable (2m)
- Spray paint
- Energy label

Register your fireplace for better service and support

We recommend registering your fireplace.

By registering, we have the correct information about your appliance. In case of a malfunction or maintenance, we can assist you faster and more efficiently – if your installer or dealer is unable to resolve the issue or is no longer reachable.

To register, you will need the serial number of your fireplace. You can find this on the type plate (sticker with the technical details of the fireplace), located on the inside of the appliance, on the separate registration card supplied, and/or in the manual.

Registration is quick and only takes a few minutes. This ensures you receive the best possible service – now and in the future.

Register here:

2 Safety

The following sections provide safety information about the gas fire:
- Safety related to installation
- Gas and electrical units already installed
- Installation regulations
- Safety regulations for decorative elements
- Safety related to use
- Three safety measures for the gas fire

2.1 Safety related to installation

Installation of the gas fire requires diligent pursuit of procedures. During installation, please adhere to the regulations that apply to safety and health in your country (the Working Conditions Act, for example).

General installation instructions:

- The procedures described may only be carried out by authorised technical professionals.
- Follow the installation procedures diligently to avoid damage and accidents.
- Use adequate protection resources during installation.
- Ensure that local circumstances such as gas pressure and the type of gas are consistent with the information on the data identification plate of the gas fire.
- Only install a gas fire in an area that has sufficient ventilation in compliance with the standards in force.
- Always conduct a chimney calculation, as indicated in the Chimney Calculation.
- Always make use of a concentric flue duct system that complies with the approval conditions of your gas fire. Adhere to the installation regulations as stated.

2.2 Gas and electrical units already installed

Concentric flue duct system confirmation

The gas piping and gas control valve to the fireplace need to be installed by an authorized fitter and are not supplied with the appliance. The diameter of the gas piping must be determined for each appliance in compliance with the directives in force:

- NEN 1078 and NPR 3378 apply to The Netherlands.
- NBN D51-003 (chimney connection and gas connection) applies to Belgium.
- Arbeitsblatt G600 DVGW-TRGI applies to Germany.

Checking the gas specifications

Check that the gas specifications match the connection.

The data identification plate indicates the suitable gas type and gas pressure of the gas fire. This id plate is located on the left side of the cooling slot on a metal plate. This can be tilted upwards (see paragraph 5.5). To do this, remove the front glass from the fireplace. A second copy of the id plate is stuck on the inside of the front cover of the user manual.

Ask Kalfire about the possibilities if you want to use the gas fire in combination with another type of gas.

Electrical installation confirmation

The electrical installation to the gas fire must be installed by an approved fitter and is not supplied with the appliance. Power supply and required electrical power: 230V/60W VAC.

WARNING!

The gas fire needs a permanent power supply. Errors recorded earlier are lost during any interruption to power supply. Regular interruption of the power supply impacts the safety mechanisms, whereby hazardous situations can arise.

WARNING!

If there is a two-phase network, an isolating transformer must be installed. This transforms the 2 phase network into a standard 1 phase network of 230V.

2.3 Installation instructions

The following conditions must be adhered to during installation:

WARNING!

- Ensure sufficient ventilation in the area in which the gas fire is to be installed. The installation area is sufficiently ventilated if: The nominal power of the appliance in kilowatt / content of the installation area in cubic meters is less than 35.
- Reference is made to both national and local provisions in force to determine a safe distance from the wall against which the

appliance is mounted and the adjacent walls, roof ducts and windows.

- Only non-flammable materials should be used during installation of the gas fire.

WARNING!

- The floor on which the appliance is mounted must consist of heat-resistant material. Should that not be the case, then no flammable material may be placed under the appliance. This also goes for the walls behind and adjacent to the fireplace and the ceiling.
- Walls to which the gas fireplace is attached must not become warmer than 85°. This applies both to static walls made of non-combustible building materials and to walls made of or with combustible building materials, as well as to warm insulated walls made of or with combustible building materials. This requirement is ensured:
  - if the walls in question are protected with a 3 cm thick calcium silicate board with a thermal conductivity coefficient of 0.1W/mK or other suitable insulation with comparable thermal resistance,
  - if the gas fireplace is placed at a distance of at least 2 cm (air gap) from the dam layer.
  - and the specified convection air openings have been created in accordance with the installation instructions, (paragraph 5.9)
- The materials used for the fireplace cladding must be heat-resistant and non-combustible. The fireplace must never be insulated. Any materials, plaster, or wallpaper covering the wall—especially above the fireplace—must be heat-resistant.
- No combustible materials may be used near the flue pipe. The high temperatures of the outer wall (up to approx. 150°C) pose a fire hazard. Maintain a minimum distance of 55 mm from combustible materials.
- When operating the Kalfire gas fireplaces with the system-certified concentric air/flue gas system KALFIRE AIR STREAM T400-N1-W-V3-L50050-O 55, it is ensured that the outer casing of the ventilated annular gap does not reach temperatures above 150°C at nominal heat output. Therefore, a minimum distance of 55 mm from building materials made of or containing combustible substances is required to ensure fire safety.
- If the LAS flue pipe KALFIRE AIR STREAM passes through components made of or containing combustible materials, it is ensured that temperatures on these components will not exceed 85°C, provided the pipe is encased with at least 55 mm of mineral wool or silicate materials with a thermal conductivity of < 0.1 W/mK.

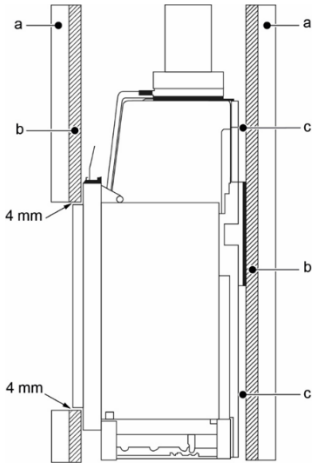

Figure 1:
a. Combustible wall or highly insulated wall with a U-value ≤ 0.4W/m2K
b. 3 cm thick calcium silicate board with a thermal conductivity of ≤ 0.1W/mK
c. Distance gas fire insulation material min. 2cm (air gap)

CAREFUL!
The gas fire and the surround have different expansion rates. The gas fire must be mounted at least **4 mm** from the **surround** to prevent damage. Too little room causes undesirable material tension.

CAREFUL!
At the front, between the glass strip (metal strip at the bottom of the glass) and the plateau, a ventilation gap of **at least 7 mm** must be maintained to ensure proper cooling of the E-box. This gap must not be covered once the fireplace is in use.

When using a Kalfire mounting trim, this ventilation gap may be slightly larger — up to a maximum of 8.5 mm — due to manufacturing tolerances.

2.4 Safety instructions for decorative filling

DANGER!
The decorative elements must be placed according to the instructions. It is prohibited to alter the number of decorative elements or the configuration thereof. Such alterations can lead to hazardous situations in terms of fire safety.

WARNING!
The ignition or ionisation rods must be left uncovered. Ensure this is the case when placing the decorative elements. Careless decoration of the gas fire can cause incorrect ignition or a hazardous situation.

WARNING!
If the fireplace is supplied with Natural Spark Generator, the plastic filler cap should not be removed during installation. The plastic filler cap is required to ensure proper operation. The filler cap is then covered with a piece of ceramic log when decorating the fireplace.

CAREFUL!
During operation of the appliance, small hairline cracks may develop in the ceramic logs. These have no negative impact on the operation or flame profile of the appliance. Hairline cracks do not fall under the warranty.

CAREFUL!
When heated, the gas fires's internal metal lining can expand. This can cause the layer of paint on the metal to deform, resulting in damage or imperfections. The spray paint supplied with the gas fire allows any paint damage to be fixed.

2.5 Safety related to use

There are risks attached to using a gas fire. The temperature of all visible parts of the gas fire can rise steeply and there is a risk of fire or combustion. Be sure that the following safety precautions have been taken:

WARNING!
After installation of the gas fire, the visible parts of the appliance (including the glass surface) are considered as part of the active zone. Especially the glass can get extremely hot!

Children and dependants are to stay clear of the burning gas fire.

DANGER!
Make sure that flammable materials such as curtains and furniture are at least 100 cm from the fireplace. If a fireguard is used, this distance must be at least 40 cm.

WARNING!
Should the floor in front of the fireplace consist of combustible material and the distance from the underside of the combustion chamber to the floor be smaller than 10 cm, a heat-resistant fireguard floor plate larger than 30 cm or a stone should be placed.

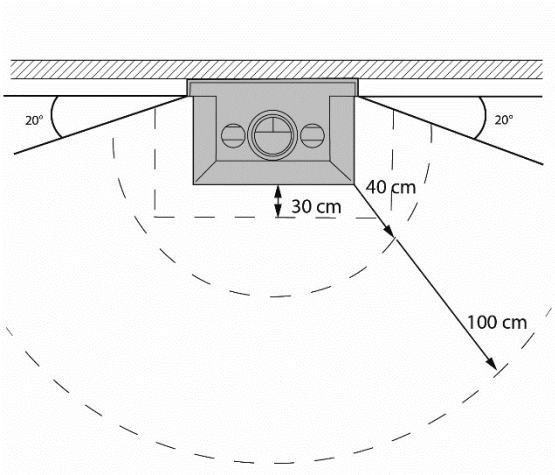

Figure 2: Safe zone

Danger of burning

WARNING!
Do not touch the appliance! The gas fire is hot when switched on or just switched off. Ensure extra safety precautions and safety measures if less able-bodied persons, elderly people and/or children have access to the fireplace. Only the remote control can be used without fear of danger due to combustion.

Danger caused by fumes or gas leaks

IMPORTANT!
Fumes and/or gas leaks can cause life threatening situations. Fumes can be the cause of carbon monoxide poisoning and gas leaks are an explosion risk.

If you notice fumes or gas, take the following precautions:

1. Switch off the gas fire.
2. Close the main gas valve.
3. Open windows and doors.
4. Advise an approved installer of the issue.

IMPORTANT!
Should damage occur, close the gas valve. Do not use the gas fire if a glass panel is cracked, is not in place or incorrectly mounted.

The risk of discolouration

CAREFUL!
After the convection system of the fireplace has been heated, air particles, cigarette smoke, candles and oil lamps can cause discolouration of walls and ceilings. Ensure sufficient ventilation in the room in which the fireplace is installed.

CAREFUL!
Taping off the fireplace is at your own risk; paint damage caused by taping is not covered by the factory warranty.

2.6 Three safety measures for the gas fire

The flame is detected due to electronic ionization measurement. If the gas fire does not detect a flame during the start-up phase, the gas supply is interrupted for one minute. A new ignition attempt follows automatically. To interrupt automatic ignition attempts immediately; Press the on/off button (max 2 sec.) to switch the fire off immediately.

A 24-hour security system
If no flame is detected after three automatic ignition attempts (for gas types G20, G25), a blocking occurs. For gas types G30 and G31, this blocking occurs after one ignition attempt. This lockout can be manually unlocked twice with the remote control. If no flame is detected after these two manual releases, a 24-hour lock-out will follow. You can then not use the gas fire for 24 hours.

Pressure relief device
The gas fire is equipped with an overpressure safety device to minimise risks. Should an explosive ignition occur, the top window will open forward to reduce pressure.

Kalfire gas fireplace installations comply with increased tightness requirements
Kalfire closed gas fireplaces, along with the corresponding Kalfire air and exhaust systems, always meet the tightness requirements up to 50 Pa. This ensures that Kalfire gas fireplace installations comply with increased tightness requirements. As a result, building-specific conditions in combination with other technical installations cannot lead to a dangerous amount of combustion gases being released into the installation space. Therefore, additional safety measures are not required for Kalfire gas fireplace installations.

3 Description

Kalfire gas fires are internationally renowned for their realistic flame effects. Kalfire fireplaces are easy to operate and maintain.

Closed gas fires
At the heart of the Kalfire Gi-technology is the KalTelligence developed by Kalfire. A control system unique to the fireplace industry that enables new, revolutionary functions and unprecedentedly fine control of the fireplace.

The Kalfire Gi comes with an **EmberGlow** function. Here, the base of the fireplace is equipped with LED lighting in the form of a natural glow bed. The lighting generates an atmospheric imitation of the glow bed of a real wood fire. The EmberGlow function can also be switched on separately without switching on the gasfire.

The Kalfire Gi can optionally come with the **Natural Spark Generator.** This causes sparks to rise naturally from the burning flames in the fireplace and burn slowly.

Heat emission
The heat generated by Kalfire gas fireplaces is directly emitted to the space in which the fireplace is located through radiation and convection. Radiant heat is emitted through the glass, while convective heat flows into the installation space through a convection mantle or the mantelpiece at the top.

Smooth transition between fireplace and surround.
During installation, the closed gas fires blend in neatly with the interior. The plateau in front of the fireplace, which is often made of natural stone, can be used with the help of the plateau support it can extend into the frameless window of the fireplace. The side walls can be finished smoothly into the surround of the fireplace. The rear wall can be extended beyond the fireplace so that no metal frame is visible anywhere.

Operation
The closed gas fire can be operated as standard via remote control or KalfireConnected app. This allows you to switch the fire on or off and operate the various functions described later in this manual.

4 Preparation

The upcoming sections provide preparatory information prior to installation of the gas fire:
- Preliminary work with the help of a scale drawing
- Chimney calculation
- Check the gas fire
- Check UTP connection and/or WiFi signal

4.1 Preliminary work with the help of a scale drawing

You can use to your advantage a scale drawing prior to and during the placing of the concentric flue duct system and the gas fire. Scale drawings are available on the http://www.kalfire.com/en/ fireplaces website. Select the correct gas fire type here. Once you have made your choice, a page will open on which you will find "technical information". The subject "documents" with the scale drawing of the gas fire can be found there too.

4.2 Chimney calculation

Calculate the concentric flue duct system with the values of the chimney calculation or make a choice from the configurations in the appendices. See: flue duct configurations 1 through 6, paragraph 8.1.

A chimney calculation is made for the roof pass-through and the wall pass-through. The chimney calculation is suitable for gas types G20, G25, G30 and G31. Kalfire cannot guarantee proper operation of the fireplace if your configuration does not comply to the chimney calculation.

⚠ **CAREFUL!**

Many elbows and/or horizontally-mounted components of the flue duct can create substantial resistance. The flame pattern can vary considerably because the combustion air cannot easily reach the gas fire.

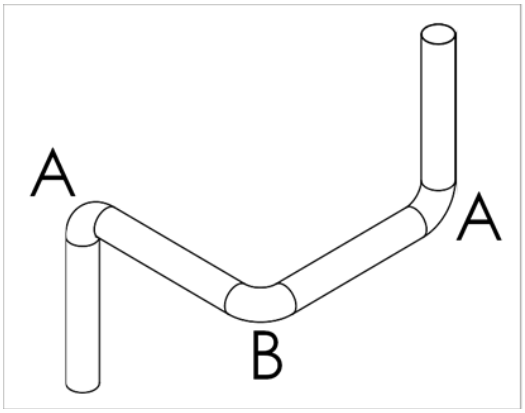

Figure 3: Flue duct components

Table 1: Calculation values chimney calculation

Components	Maximum permitted Kalfire Gi
First vertical metre	
Second metre and subsequent vertical metres	11 meter
metre horizontal pipe	5 meter
90° vertical elbow (A)	3 units
45° vertical elbow	6 units
90° horizontal elbow (B)	2 units
45° horizontal elbow	4 units

Example of chimney calculation

Used parts	Calculation Value
1x 1st vertical metre	+9
1x 2nd vertical metre	+1
2x metre horizontal pipe	-2
2x 90° vertical elbow (A)	-4
1x 90° horizontal elbow (B)	-4

Result: 9 + 1 - 2 - 4 - 4 = 0. (This chimney calculation is not acceptable, it must be at least 0.5)

WARNING!
the sum of all calculation values must be higher than 0.5. At a value lower than 0.5, the gas fire will not function according to standard EN613. Deviating configurations can be presented to Kalfire for written approval.

4.3 Check the gas fire

Confirm mechanical operation
Check if all moving parts of the gas fire are functioning correctly,
principally the door, before installing the fireplace.

4.4 Check UTP connection and/or WiFi signal

For correct and stable operation of the fireplace, it is recommended to connect the fireplace to the home router with a fixed LAN connection. Check whether it is possible to make this connection. If necessary, the house router and fireplace can be connected via Wi-Fi. Check the Wi-Fi signal at the fireplace. See also paragraph 5.3.

5 Installation

The upcoming sections provide information about the installation of the gas fire:
- Installing the flue duct and roof pass-through
- Placing the gas fire
- Connecting the gas fire
- Cleaning and testing the gas fire
- Gas measurement
- Sustainability measurement
- Placing the restriction plates
- Placing and finishing the surround
- Placing decorative elements

5.1 Installing the flue duct and roof pass-through

Place the flue duct and roof pass-through according to the manufacturer's instructions. Take the material regulations into account. See: Installation Instructions, paragraph 2.3.

1.1.1 Configure the concentric flue duct system

WARNING!
This gas fire has been tested and approved according to CE standard EN-613. The inspection was carried out in combination with concentric flue pipe systems (Ø 130-200 mm), rigid and/or flexible, either Kalfire or Stocker (T600 N1 W V2 L50040 O50). Only these flue pipe systems may be applied to the gas fire in order to continue to comply with the inspection provisions. If component parts or flue pipe systems made by other manufacturers are applied, the warranty and certification of the gas fire will lapse.

WARNING!
The concentric duct should be sealed between the elements in the form of a rubber ring or tape.

WARNING!
No flexible duct should be connected directly to the appliance. The first metre from the appliance must always be carried out with a fixed pipe.

After the first metre, the inner pipe (flue) may be made with a flexible pipe. The outer pipe (fresh air supply) must consist entirely of a fixed pipe or existing chimney. A concentric duct composed entirely of flexible pipe is not allowed.

REMARK
Depending on the chosen flue pipe configuration and length, the temperature of the concentric flue duct will be between the 200°C and 350°C.

Two methods for configuring the chimney can be applied;
- You can configure a chimney according to the chimney calculation. See: Chimney calculation, paragraph 4.2 .
- You choose configuration 1-6 belonging to the product. See: flue duct configuration 1 through 6, paragraph 8.1.

5.1.2 Dakdoorvoer bestaand rookkanaal aansluiten C91 (optie)

Connect roof pass-through of existing flue duct C91 (option)
The flue gases are discharged through a flexible or fixed inner pipe. The air supply runs through the flue on the outside of the flexible or fixed pipe.

If an existing flue duct is used, the fitter needs to undertake a visual inspection beforehand. The flue duct should have a minimum temperature class of T400. The minimum dimensions of the existing flue duct must equal the diameter of the concentric material: 130/200 mm. In addition, account needs to be taken of the chimney calculation. See Chimney calculation, paragraph 4.2.

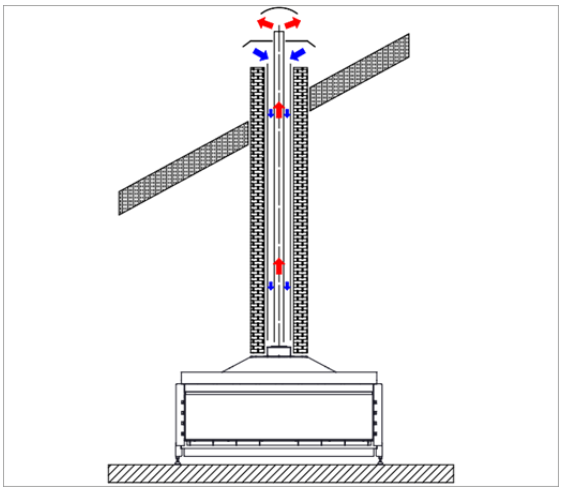

Figure 4: Roof pass-through

The following action must be taken in order to connect an existing flue duct:

1. At the top of the flue duct, use a “renovation set top with rain cap”.
2. Connect a flue liner or flexible flue liner to this, fitted through the existing duct. Ensure this is well sealed.
3. Lead the flue liner or flexible flue liner through the existing flue duct.
4. Mount the “renovation set bottom concentric - connection to flex” at the entrance to the flue duct.
5. Connect a flue liner or flexible flue liner to this, fitted through the existing duct. Ensure this is well sealed too.
6. Check the flue ducts for any leaks.

⚠ **CAREFUL!**

Leaks can cause low pressure and prevent the closed system from functioning properly.

7. Seal any detected leakage.

5.2 Placing the gas fire

Place the rear wall taking the material into account. See: Installation Instructions paragraph 2.3. Then place the gas fire at the desired location. Mount the legs and finish the rear wall as indicated in the following paragraphs.

5.2.1 Fitting and mounting the gas fire

The gas fire is placed on four adjustable support legs. The support legs on the glass side of the gas fire need to be precisely sawn off before they can be mounted.

When the bolts are mounted against the rear wall, a space of a minimum of two cm is created between the rear side of the appliance and the rear wall.

⚠ **WARNING!**

It is no longer possible to adjust the glass once the surround has been finished. Should the mounting of a modified glass as a result of the incorrect placement of the original glass be required, this will fall outside of the factory warranty.

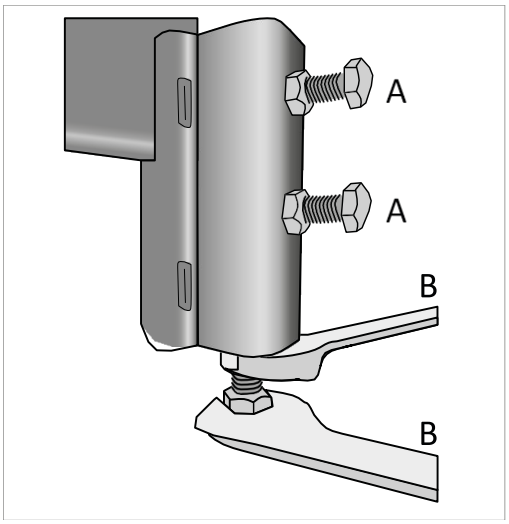

Figure 5: Setting support legs

Carry out the following steps to set and assemble the gas fire:

1. Unscrew two bolts (A) from each support leg.
2. To ensure that the support legs are on the desired height, you might have to saw the top off the support legs.
3. If necessary, place the support legs in the designated holder.
4. Set the approximate height.
5. Screw the two bolts (A) back on.
6. Set the exact height of the gas fire by adjusting the tightness of the bolts on each leg (B). The range of adjustment is 3 cm.
7. Set the gas fire to spirit level by tightening or loosening the bolts on each support leg.
8. Place the front glass in the appliance.
9. Adjust the wall clamp, leaving a minimum of 2 cm between the gas fire and the wall.
10. Secure the gas fire to the wall using the previously mounted clamps (optional).

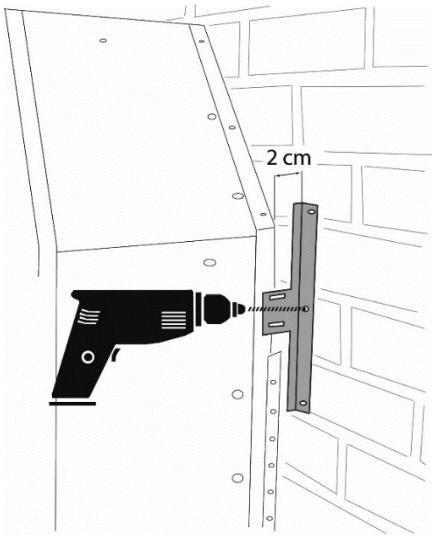

Figure 6: Mounting gas fire to wall (optional)

11. Check whether all four front glass corners align with the side glass. The twisting and turning that was necessary while setting and adjusting the gas fire, may have caused the front and the side glass to become misaligned.

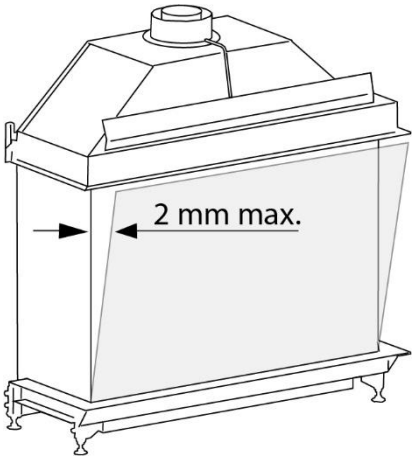

Figure 7: Check alignment front glass

12. Set the gas fire accurately by adjusting the legs, so the glass properly aligns.

5.2.2 Adjusting the stone support

The gas fire is equipped with stone support, so tiles or other plateau-finishing materials can be supported to the side of the fireplace.

The stone support can be adjusted without using steps over a 30 mm distance. The stone support is equipped with an indicator for a stone thickness of 20 mm to 30 mm, as depicted. The stone support can also be removed as one.

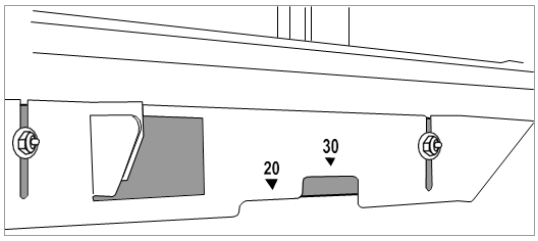

Figure 8: Stone thickness indicator

Carry out the following steps to adjust the stone support;

1. Unscrew the nuts at the bottom end of the assembly strip.
2. Set the desired height.
3. Tighten the screws and place the stones.
4. Maintain a minimum distance of 7 mm between the glass strip (metal strip at the bottom of the glass) and the hearth plate, and at least 4 mm between the hearth plate and the side panels (for corner and three-sided models).

5.2.3 Continuous rear wall finishing (option)

When opted for a continuous real wall finishing, the following steps should be carried out:

1. Determine the side to which the rear wall is to be continued.
2. Remove the four nuts as depicted in the figure.

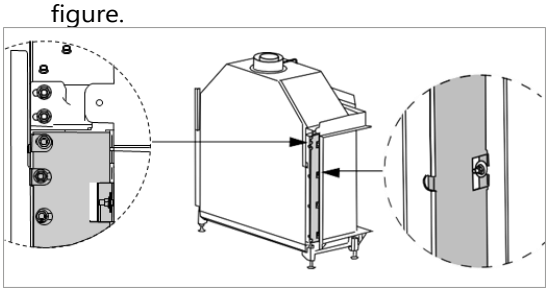

Figure 9: Removing the strip

3. Unscrew the upper and lower nuts.
4. Remove the steel vertical strip.
5. Place the panel (ceramic glass or design) that you wish to continue outside of the fireplace in the correct position.
6. Always leave 4 mm space between the panel and the glass frame, in order to keep it accessible for service requirements.

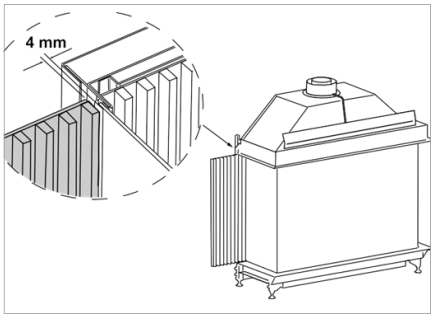

Figure 10: Space between panel and fireplace (4 mm)

5.3 Connecting the gas fire

5.3.1 connecting the gas pipe

All necessary connections are located on the right side of the E-box located under the fireplace.

- Fit the gas pipe and connect the fireplace with a 3/8" female thread.
  For the UK: use a straight connector brass 3/8”. You may order this from Kalfire (item no. 520213: straight connector brass 3/8" male iron x12mm)

- Vent the gas pipe, via the pre-pressure measuring nipple (located at the front of the fireplace).

5.3.2 Connect the gas fireplace to the home router

For proper operation, the fireplace needs an internet connection. This can be via a fixed LAN connection or via Wi-Fi.

If you choose a fixed connection, you need to connect the UTP connection to the house router with a cable.

TIP!
If there is no possibility to run a cable from the home router to the fireplace, you can use a powerline adapter. A powerline adapter sends the internet signal (partly) via the router's power network to the socket near the fireplace. You then connect the fireplace to the powerline adapter in the socket. Note that two sockets are now required to install the fireplace.

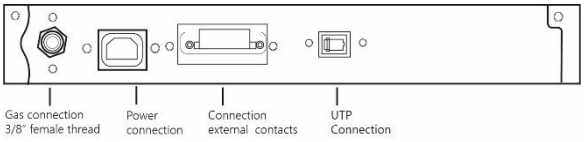

Figure 11: E-box connections

If you choose a wireless connection, you should follow the instructions in the KalfireConnected app which can be downloaded from the Apple or Google app store.

TIP!
Check the strength of the wifi signal near the fireplace. If necessary, place a wifi amplifier near the fireplace to ensure a strong and stable signal.

For the sake of stability, we recommend using a fixed connection.

5.3.3 Connecting external contacts

You connect any external contacts to the connector located on the right side of the E-box.

- Disconnect the plug from the connector.

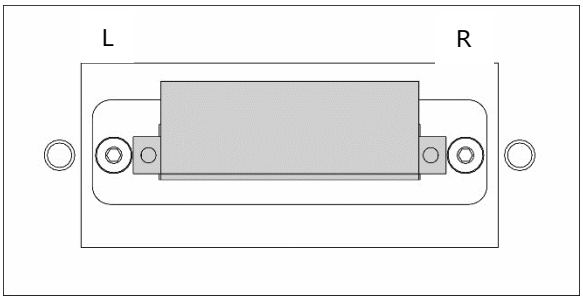

Figure 12: Connector external contacts

- Then connect the external contacts to the correct position in the connector.

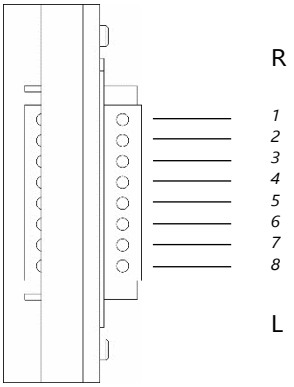

Figure 13: position external contacts

Consult paragraph 8.2 for an explanation and potential applications of the contacts.

5.3.4 Connection to the power network

Finally, connect the fireplace to the power network. To do this, use the power cable provided.

TIP!
When installing the casing, make sure that the connections remain accessible.

Turn on the on/off switch. The on/off switch is located on the front of the fireplace, on the right, and can be accessed through the 7mm air gap.

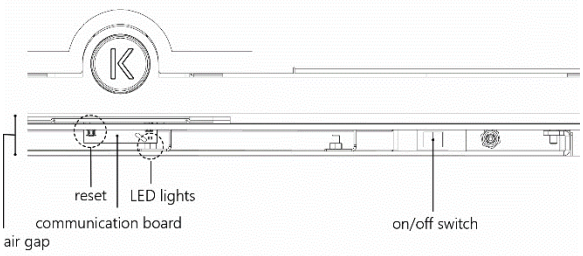

Figure 14: position on/off switch

5.4 Cleaning and testing the gas fire

Clean the glass and test the gas fire before you finish the surround.

⚠ **CAREFUL!**

Grease emanating from fingers or other materials can burn into the glass. These burnt-in spots are permanent and cannot be cleaned.

⚠ **CAREFUL!**

When the newly-installed fireplace burns for the first time, the varnish can emit a smell. This smell will disappear naturally, once the varnish has completely hardened.

Clean the glass before first ignition.

- For standard ceramic windows. See: Cleaning the (standard) ceramic windows (paragraph 7.1).
- For anti-reflective glass. See: Cleaning instructions anti-reflective glass (paragraph 7.1).

Ignite the fireplace.

During the first time, it can take a while for the fire to ignite and continue to burn. This is caused by air in the gas pipe.

5.5 Gas measurement

Check the pre-pressure of the gas connection after installation. Carry out this measurement to verify whether the appliance is supplied with enough gas and the burners retain sufficient pressure

The gas pressure can be measured via the pre-pressure nipple which is accessible via the cooling slot near the windscreen. To do this, remove the front glass from the appliance.

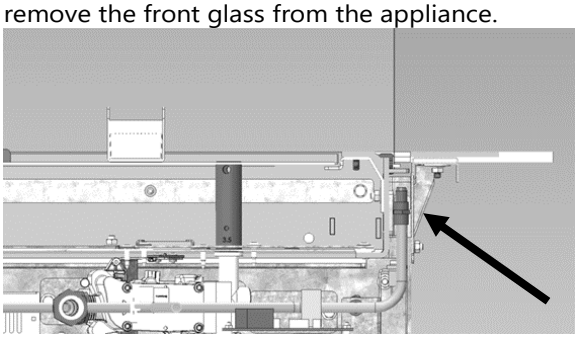

Figure 15: Gas measurement

The data identification plate indicates which type of gas the appliance is set for. The id plate is located on the left side of the cooling slot on a metal plate. It can be tilted upwards (see figure 16). To do this, remove the front glass from the appliance. A second copy of the type plate is stuck on the inside of the front cover of the user manual.

TIP!

Note down the unique serial number of the fireplace for your own records. Kalfire can thus help you faster in case of maintenance or service.

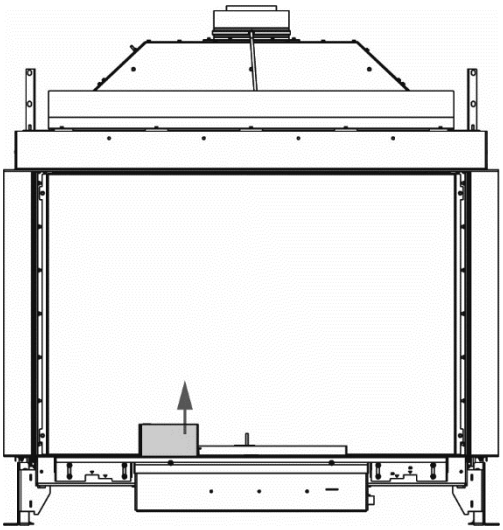

Figure 16: Position type plate

5.6 Sustainability measurement

⚠ **ATTENTION!**

sustainability measurement through sustainability measuring points. is not applicable in the Netherlands.

The sustainability measurement serves to confirm that the flue duct has been connected and the gas is sealed. We recommend to check the flue duct before finishing the surround.

The oxygen (O2) and carbon monoxide (CO) values can be measured through the sustainability measuring points. The O2 value describes the operation of the flue duct, the CO value indicates the quality of combustion.

Potential irregularities in the operation of the appliance can be detected in this way. Use silicone tubing to connect the measuring equipment to the measuring points.

The measuring process is as follows:

1. Open the design frame at the front above the door (applies to front models only).
2. Remove the rubber caps from the measuring nipples that are indicated with O2 and CO.

3. Use the measuring equipment as indicated in the meter's user instructions.
4. Connect the measuring equipment to the CO measuring nipple to measure the CO value.
5. Start the measurement and verify the values;

lower than 1000ppm	Functioning properly.
higher than 1000ppm	Check the burner pressure, the configuration of the decorative elements and confirm the concentric flue duct system is not obstructed

Table 2: Action following CO value measurement

6. Connect the measuring equipment to the O2 measuring nipple to measure the O2 value.
7. Start the measurement and verify the value;

lower than 19%	Check the flue duct for leakage (especially at the connection points) and check whether the air outflow is obstructed.
higher than 19%	Functioning properly.

Table 3: Action following O2 value measurement

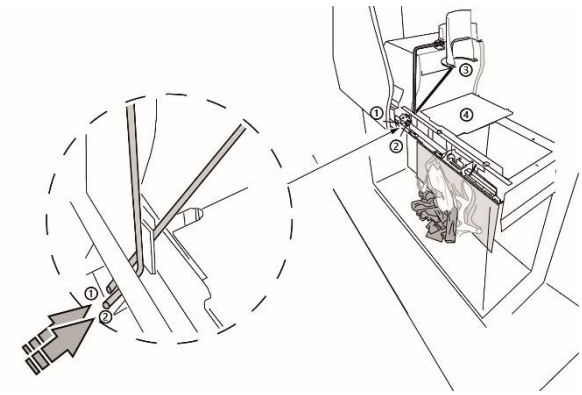

Figure 17: Sustainability measurement
(1) CO
(2) O2
(3) position restriction plate
(4) ceiling plate

5.7 Placing the restriction plates

If the chimney calculation (paragraph 4.2) indicates a value greater than 5.5, a restriction plate should be fitted in the flue gas flue.

If the chimney calculation indicates a smaller value, the restriction plate does not need to be fitted.

For the Kalfire Gi, restriction plate 68 applies to all models and all types of gas. This restriction plate is supplied as standard with every fireplace.

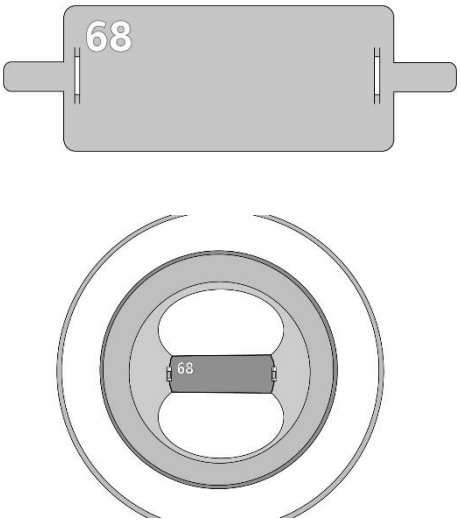

Figure 18: Restriction plate / assembly in the flue

Carry out the following steps to place the restriction plate:
1. Remove the door. See: Door dismantling and assembly (paragraph 7.1)
2. Bend both lips 90 degrees at the outer point of the restriction plate.
3. Remove the ceiling plates (paragraph 5.9).
4. Transfer the restriction plate from the gas fire to the opening of the pipe.
5. Mount the restriction plate in the eyes of the inner wall of the pipe opening (see Fig. 18).
6. Next, bend the lips inwards.
7. Check if the appliance is not operating at the lowest flame intensity and that the flames are not too high in the highest intensity mode

5.8 Removing the ceiling plates

The Kalfire Gi comes standard with ceiling plates (no. 4, figure 17). These ceiling plates are held in place by positioning tabs on the front of the fireplace. To remove the plates (for example, to place them on the restrictor plate), the positioning tabs must be bent backwards. Each panel can then be removed obliquely from the fireplace. Refitting is done in the reverse order.

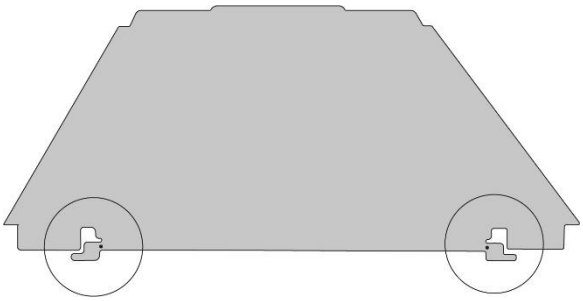

Figure 19: Ceiling plate with positioning tabs

CAREFUL!
For flue duct configurations 2 to 4 (see paragraphe 8.1), we recommend to remove the the ceiling plates permanentl.

5.9 Placing and finishing the surround

Protection against high temperatures

FIRE HAZARD!
The gas fire can be delivered with or without convection hood. In all cases it is important that there is sufficient ventilation. The temperature on the top of the appliance is very high. Under no circumstances may the surround be insulated. Always follow the installation instructions.
See: Installation Instructions paragraph 2.3).

Connecting without convection hood
Place the grids or other openings in the surround for the ventilation of a fireplace without convection hood. The grids or opening protect the surround against high temperatures. Ventilation grids must have a dimension of at least 350 cm2 per side. Grids can be replaced by opening with an intake of at least 350 cm2 and an outflow of at least 350 cm2.

TIP:
Deviating connections can be submitted to Kalfire for written approval.

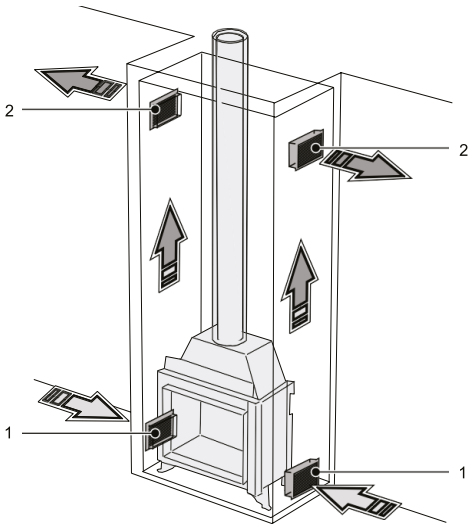

Figure 20: Housing gas fire without convection hood
(1) Air intake grid (two openings of at least 175 cm2)
(2) Grid for exit of convection air (two openings of at least 175 cm2)

Connecting with convection hood
The convection hood is mounted on the appliance in the factory and so cannot be installed afterwards. The convection hood ensures a delivery of controlled heat in the room where the gas fire has been installed. This optimises the heat output of the appliance.

Mount two aluminium ducts of (Ø150 mm) to the convection hood and connect these to the ventilation openings or grids mounted on the convection hood. The total cross-section of the outlets must be a minimum of 350 cm2.

CAREFUL!
Sealing the fireplace is at your own risk, damage to the varnish caused by sealing falls outside of the factory warranty.

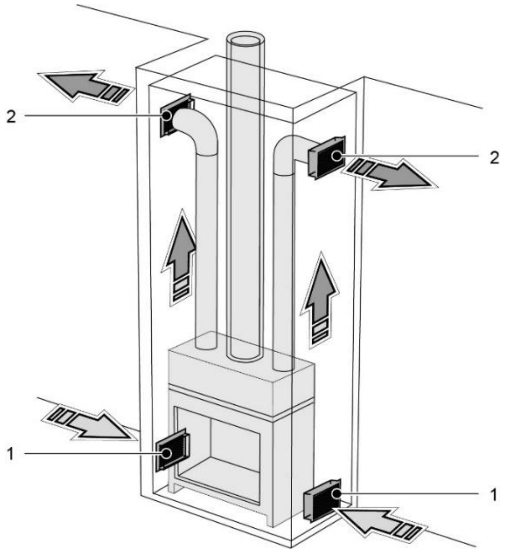

Figure 21: Housing of the fireplace with convection hood
(1) Air intake grid (two openings of at least 175 cm2)
(2) Grid for exit of convection air (two openings of at least 175 cm2)

TIP!
Ensure that the right-hand ventilation inlet can be opened so that you can access the various connections located on the right-hand side of the E-box if necessary (see paragraph 5.3)

The air gap
The fireplace's electronics are cooled by means of a fan that comes on when the temperature exceeds 35 degrees. The air is drawn in through a 7mm air gap to be provided at the front.

WARNING!
Make sure that no construction debris can fall into the E-box during installation and finishing of the fireplace. For this, temporarily cover the air gap. (e.g. with a piece of cardboard).

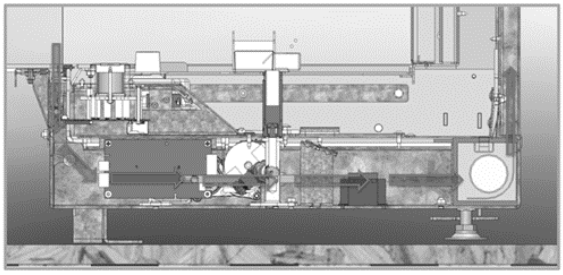

Figure 22: Fresh air flow in the E-box

5.10 Placing decorative elements

WARNING !

Placing decorative elements Kalfire G appliances
The decorative elements must be placed according to the instructions. It is prohibited to alter the number of decorative elements or the configuration thereof. Such alterations can lead to hazardous situations with regard to fire safety. Take the instructions into account: Safety instructions for decorative elements (paragraph 2.4)

Place the burner logs and then the log set according to the example in the paragraph 8.5.

6 Operation Kalfire Gi

6.1 Operation options

Operation of the fireplace can be done using either the Kalfire remote control or the Kalfire Connected app. The Kalfire Connected app offers more and more extensive operating options. This app can be downloaded for free in the Apple and Android app store respectively. The remote control is supplied with the fireplace as standard.

6.1.1 Placing the battery

Insert the supplied battery into the remote control.

- Grasp the remote control on-the-head and turn it over.
- Place your thumb as shown below.
- Press the back lightly with your thumb and slide the cover upwards at the same time.

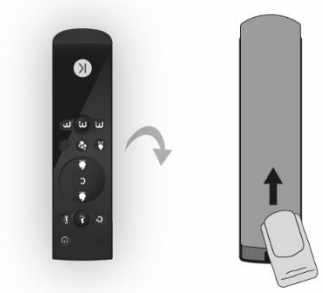

Figure 23: placing the battery

- Insert the battery (1 x AAA)
- Replace the cover in reverse order.

⚠ **CAREFUL!**

The remote control contains a temperature sensor and should be in the room where the fireplace is located at all times, even if you only operate the fireplace via the app. The remote control must be paired with the fireplace.

6.2 Pairing the remote control

The remote control must be paired with the fireplace. Pairing is done at the factory. If batteries are inserted in the remote control, automatic pairing takes place.

If automatic pairing does not take place, proceed as follows:

You easily check whether the fireplace is paired by operating button 8 EmberGlow of the remote control (see image below). If the glow bed in the fireplace lights up (even when the fireplace is not lit), the remote control is paired. With each press of the button, the glow bed's light intensity increases.

If the remote control is not paired, follow the instruction below.

Pairing:

To pair the remote control with the fireplace, both the communication board and the remote control must be activated.

- The green LED light on the communication board flashes.
- Briefly (2-5 sec), until the KalSense ring turns blue) press the reset button on the communication board. The communication board is located at the front of the fireplace and can be reached through the 7mm air gap (also after installation). Use a plastic/wood (**not iron!**) stick with a blunt tip.

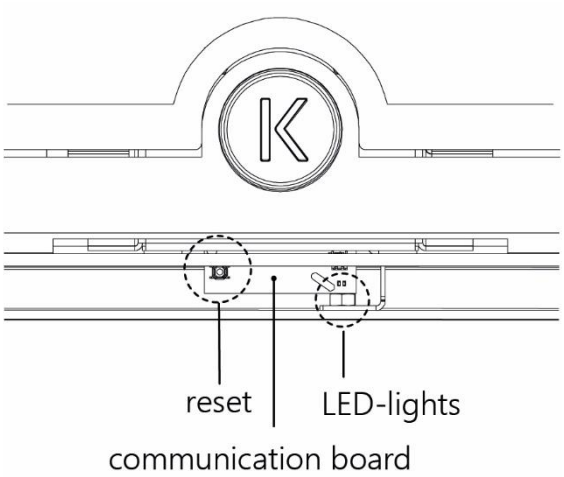

Figure 24: position reset button / LED-lights

- Then (within 30 seconds), press the key combination below on the remote control to activate the handheld mode.

Pairing remote control on

The red LED-light on the left top of the remote control starts to blink.

- Release the keys.

If the green LED light on the communication board is continuously lit and the KalSense ring flashes blue, the remote control has been successfully paired.

6.3 KalSense ring

The patented KalSense ring located directly behind the glass at the front of the fireplace provides instant feedback on operating actions.

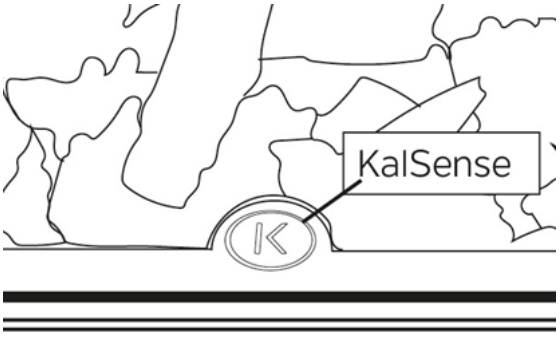

Figure 25: KalSense ring

The ring indicates the status of the fireplace by colour, division and/or flashing. For example, if the EmberGlow function is activated with the remote control or via the app, the ring briefly lights up orange and then goes out again.

The 9 sections (LED lights) into which the ring is divided indicate the level of a particular function.

The example below shows the fireplace's "increase flame height" function, which consists of 5 levels. The higher the level, the more LEDs in the KalSense ring light up brightly. In the KalfireConnected app, the KalSense ring is also displayed on the screen. This corresponds to the KalSense ring in the fireplace.

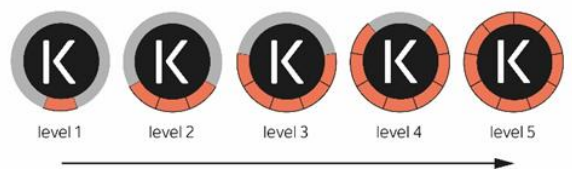

6.4 Remote control and symbols

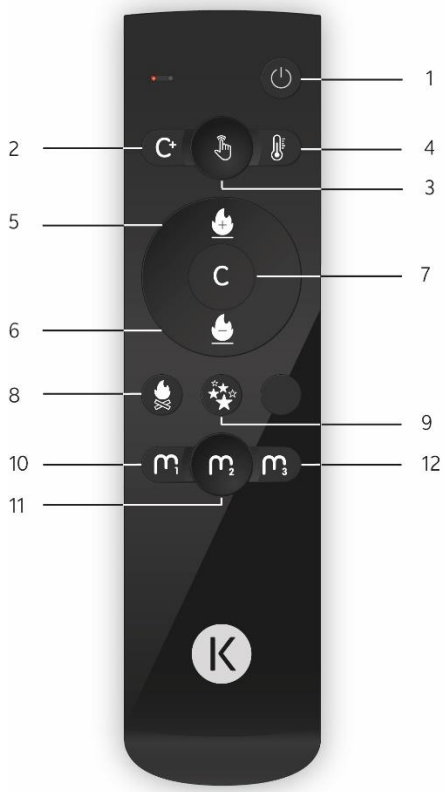

1. Fireplace on/off
2. Comfort+ function
3. Manual control
4. Thermostat function
5. Increase flame height
6. Reduce flame height
7. Comfort function
8. EmberGlow
9. Natural Spark Generator
10. Moods 1
11. Moods 2
12. Moods 3

CAREFUL!

Change in the flame pattern after selecting a certain function almost always occurs with some delay. Depending on the function selected, this delay may be longer or shorter. The fireplace needs some time to measure the temperature (in some cases), calculate the correct setpoints and control the three gas valves.

Fireplace on
Press and hold the "fireplace on/off" button until the KalSense ring "fills up", then immediately release the button. The fireplace goes through the start-up cycle. During the start-up cycle, the KalSense ring flashes orange.
The start-up cycle is complete when the KalSense ring lights up white briefly and then goes out.

WARNING!
The entire start-up cycle takes several minutes (the fire goes through a safety protocol, among other things, during the start-up cycle).

Switching on the fire / start-up cycle

If the on/off button has been held for too long or too short a time, the KalSense ring briefly lights up red.

Restart the fireplace.

WARNING!
During the start-up cycle, you cannot operate the various functions of the fireplace. However, you can abort the start-up cycle with the on/off button.

WARNING!
You should wait at least 3 minutes after aborting the start-up cycle before restarting the fireplace.

If the fireplace interrupts the start-up cycle for technical reasons or if the fireplace goes out after completing the start-up cycle, this may have several causes.

Switching off the fireplace
From run mode (the fireplace is on): press button 1 x (do not hold) to switch off the fireplace. The KalSense ring lights up briefly.

Comfort + function
Moves to the last used comfort plus setting.
KalSense feedback: green

Manual operation
From the programmed modes (Comfort+, thermostat function and Moods) back to manual control.
KalSense feedback: white

Thermostat
Moves to the last thermostat setting selected.
KalSense feedback: turquoise

Increase flame height
Increase flame height, positions 1 to 5. Position 1: centre burner on low setting only, position 2: 3 burners on low setting, position 3, position 4, position 5: 3 burners on high setting.
KalSense feedback: orange

Reduce flame height
Reduce flame height, position 5 to 1. position 5: 3 burners on high setting, position 4, position 3, position 2: 3 burners on low setting, position 1: only middle burner on low setting.
KalSense feedback: orange

Comfort
Comfort setting: gas and heat savings thanks to modulating flame height.
osition 1: three burners modulate at the highest setting.
Position 2 and 3, the average flame height of the three modulating burners gets lower each time.
Position 4: only the middle burner burns, modulating, at high setting.
Position 5: only the middle burner burns at the lowest setting. The greatest savings take place at this setting.
KalSense feedback: green

EmberGlow
In run mode (the fireplace is on): each press of the button moves to the next level in light intensity, with setting 6 being the shuffle/flicker mode.

In off mode (the fireplace is off): press the EmberGlow button and only the ledlighting comes on, then with each press of the button you move to the next level. Mode 6 is the shuffle/flicker mode.
KalSense feedback: orange

Natural Spark Generator
NSG enable. The fire continuously generates sparks at random times. The average amount of sparks depends on the selected setting. The higher the setting, the more sparks.

Keep pressing the button to move up (setting 0 to 5) through the programme. At setting 0, the NSG function is switched off.
KalSense feedback: yellow

Mood 1
pre-programmed mood (ex-factory or self-set via APP). KalSense feedback: white.

Mood 2
pre-programmed mood (ex-factory or self-set via APP). KalSense feedback: red

Mood 3
pre-programmed mood (ex-factory or self-set via APP). KalSense feedback: white

6.5 Kalfire Connected app

The Kalfire Connected app offers more and more extensive features than the remote control. Besides controlling the various functions, the temperature can be read and programmed for the thermostat and Comfort+ function via this app. Furthermore, 10 Moods can be programmed.

Multiple fireplaces can be added in the app. It is easy to switch between the different fireplaces.

We recommend that, after installing the fireplace, you install the Kalfire Connected app on at least 1 of your customer's mobile devices.

6.5.1 Installing the Kalfire Connected app

Before installing the Kalfire Connected app, check:
- whether you are on the same WiFi network to which the fireplace is connected (The app should be connected to the fireplace via the WiFi network via a 2.4GHz WIFI network).
- whether you have Bluetooth enabled.

Download the Kalfire Connected app via Apple's appstore or Android's Playstore. Search for: Kalfire Connected App.

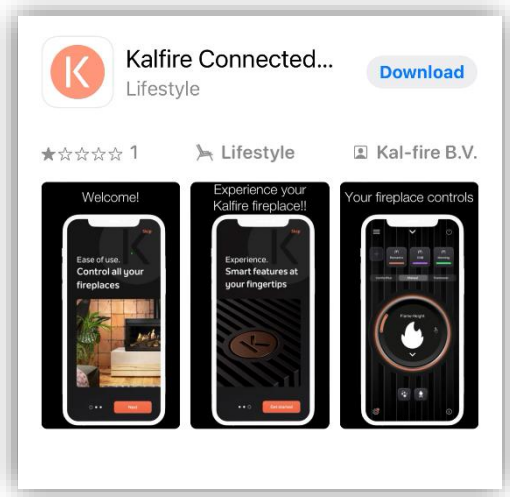

- Download the app and follow the on-screen instructions
- Create an account

If an account is created, access to all functionalities of the fireplace is obtained (which can be controlled via the KalfireConnected app). In addition, it enables the dealer to read out technical parameters in case of service or maintenance.

Once the one-time registration steps have been completed, the KalfireConnected app can be used.

7 Maintenance

The following sections provide information about the maintenance of the fireplace.
- Maintenance
- Malfunctions
- Malfunction of the Natural Spark Generator

7.1 Maintenance

Maintenance frequency
The gas fire should be inspected for optimal, sustainable and safe use annually. Malfunctions to the gas fire must be fixed instantly. Inform your client about the possibilities of a maintenance contract.

Before and after the heating season
On the inside of the glass, deposits may form after some time. This can be removed with a damp cloth or non-scratch cleaning agent (ceramic glass cleaner). Do not use corrosive or abrasive agents to clean the fireplace. Paint damage is not covered by the guarantee. Minor damage can be touched up with heat-resistant lacquer. Lacquer is available from Kalfire.

7.1.1 Cleaning the (standard) ceramic windows.

WARNING
Different cleaning instructions apply for antireflective glass.

The gas fire glass can become dirty when the fireplace is burning, but also when being taken into use. Potential causes can be: Smoking materials in the fireplace (especially in the beginning), air contamination, quality of the type of gas etc.

Requirements :
- Filth and stains on the glass must be removed immediately.
- Never turn on the fireplace when it has filth or stains on the glass. This can lead to permanent and no removable contamination.
- Clean the glass after the first use of the fireplace and clean the glass regularly in the initial period.
- Use scratch-free cleaning substances only.

7.1.2 Cleaning instructions anti-reflective glass

The gas fire glass can become dirty when the fireplace is burning, but also when being taken into use. Potential causes can be:
Smoking materials in the fireplace (especially in the beginning), air contamination, quality of the type of gas etc.

Anti-reflective glass is polished ceramic glass to which a number of metal oxide coatings have been applied that reduce the reflection to less than 1%. To prevent damage to these coatings, it is important that you carefully comply with the following cleaning instructions. A blue/purple discolouration can become visible on the anti-reflective glass, as a result of using the gas fire.

Requirements:
- Filth or stains on the glass must be removed immediately.
- Never turn on the fireplace if the glass is filthy or stained. This can lead to permanent and non-removable contamination.
- Clean the glass after the first use of the fireplace and clean the glass regularly in the initial period.
- Wear (rubber) gloves when cleaning the glass; fingerprints are particularly noticeable on antireflective glass.
- Use water and a soft cotton cloth, chamois leather or a microfiber cloth.
- Use neutral glass detergent only: water solution with neutral or light alkaline detergent without additives or abrasive substances. The acceptable share of ammonia and solvents that are organically soluble in water must be smaller than 5%.
- Carefully clean the glass: use sufficient moisture, avoid pressure and rub the substance from top to bottom, to prevent cleaning detergent to remain on the glass.
- Continuously dry the glass completely using the cloth.
- When using a vacuum lifter to remove the door, the suction cup rubber must be clean in order to prevent damage to the coating.

The table below lists the types of products **never** to be used when cleaning the anti-reflective glass:

Never use the products below:	The glass coating can be damaged by :
toilet cleaners	alkaline detergents or detergents with high levels of ammonia
hydrochloric acid	acids
bleach domestos	chlorine or sodium hypochlorite detergents
benzene, hexane or petroleum-based solvents	solvents
scouring powders, abrasive materials, steel wool, scrubbing or scouring pads, scrapers, razor blades, paper, ceramic stove cleaners	Aggressive cleaning materials

7.2 Door removal

7.2.1 Door dismantling and assembly (corner and three-sided appliances and roomdividers)

WARNING
Wear (rubber) gloves to prevent stains on the glass.

Step 1: To unlock the door, pull the handles under the hood towards you and up.

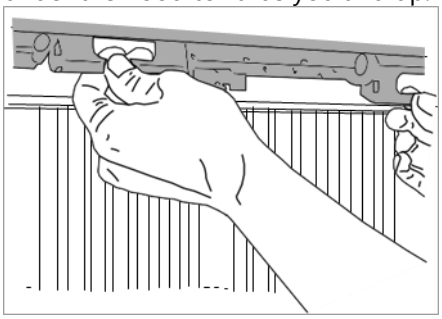

Step 2: Push the metal cover strip in left or right.

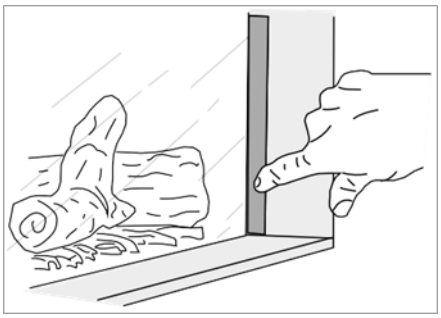

Step 3: Next, grip the door by the designated handles. Slightly lift the door with glass window out of the rabbet, move the entire door slightly to the left or right (corner fireplace) and carefully lift it entirely out of the fireplace. In a three-sided appliance the door will fall forward slightly and you will be able to lift it straight out of the rabbet.

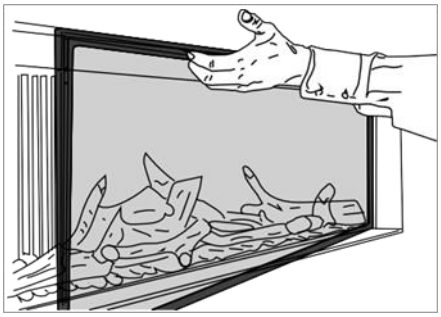

Putting the door back in place
To put the door back in place, follow the steps described in step 3 in reverse order. Lock the door by moving the handles down. Twist the metal cover strips (step 1) back into its original position by using the protruding lip at the upper side of the strip.

7.2.2 Door dismantling and assembly (front models)

Door removal

WARNING
Wear (rubber) gloves to prevent stains on the glass.

Step 1: Move the metal cover strips up from the upper side.

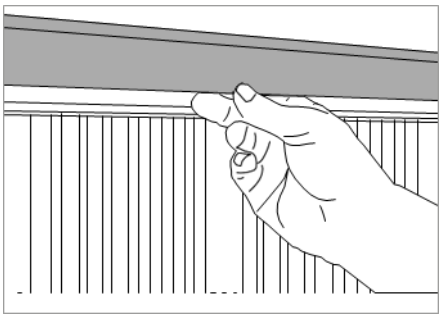

Step 2: To unlock the door, pull the handles that are placed under the hood towards you and up.

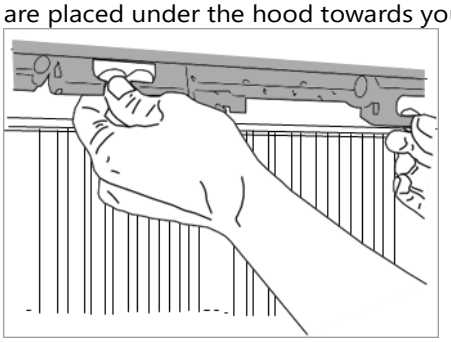

Step 3: Push the metal cover strip in left and right.

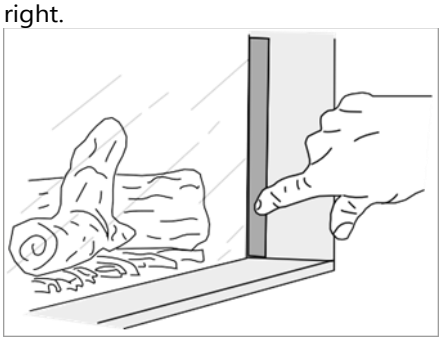

Step 4: Next, grip the door by the designated handles. Slightly lift the door with glass window out of the rabbet and carefully remove it from the fireplace.

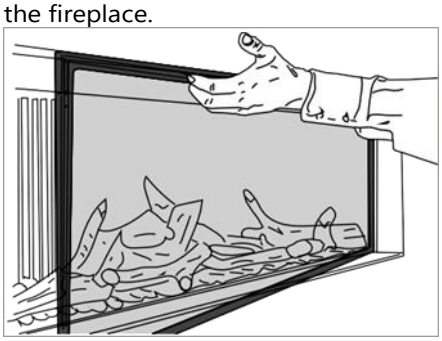

Putting the door back in place

To put the door back in place, follow the steps described in step 4 in reverse order. Lock the door by moving the handles down. Twist the metal cover strips (step 3) back in its original position, by using the overlapping edge on the upper side of the strip and fold the metal cover strip down.

7.3 Replacing batteries

If the red LED on the top right of the remote control no longer lights up if you press any of the buttons, the battery needs to be replaced. Replace the battery in the remote control as follows:

- Grasp the remote control on-the-head and turn it over.
- Place your thumb as shown below.
- Press the back lightly with your thumb and slide the cover upwards at the same time.

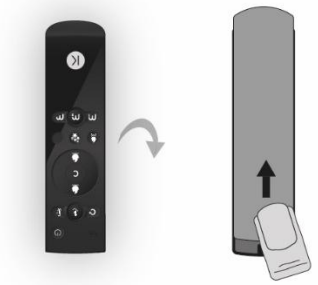

- Replace the battery into the remote control (1 x AAA)
- Replace the cover in reverse order.

7.4 Disassembly and disposal

Dismantle the device at the end of its service life according to local laws and regulations.

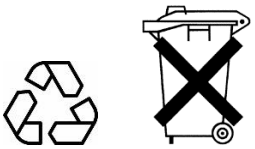

Remove the battery from the remote control. Return used batteries to a disposal point.

CAUTION!

The windows of the gas fire are made of ceramic glass and must not be disposed of in the bottle bank.

8 Annexes

8.1 Flue duct configurations 1 through 6

● AIR-STREAM 130/200

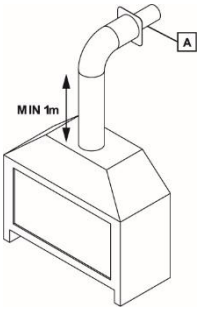

Configuration 1		
	Gi105/59F, Gi110/55C, Gi115/55S, Gi105/79F, Gi110/75C, Gi115/75S	Gi105/59F, Gi110/55C, Gi115/55S, Gi105/79F, Gi110/75C, Gi115/75S
Gas type	G20, G25	G30, G31
Flue duct diameter 130/200mm	●	●
1st metre vertical (min 1 m)	12 m.	12 m.
1st metre vertical (min 1 m)	●	●
Vertical elbow 90°	●	●
Wall pass-through [A]	●	●

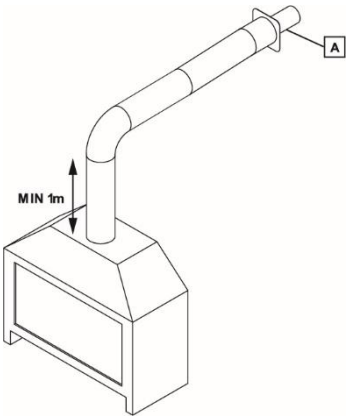

Configuration 2		
	Gi105/59F, Gi110/55C, Gi115/55S, Gi105/79F, Gi110/75C, Gi115/75S	Gi105/59F, Gi110/55C, Gi115/55S, Gi105/79F, Gi110/75C, Gi115/75S
Gas type	G20, G25	G30, G31
Flue duct diameter 130/200 mm	●	●
1st metre vertical (min 1 m)	12 m.	12 m.
1st metre vertical (min 1 m)	●	●
Vertical elbow 90°	●	●
Remove the ceiling plate	5	4
Wall pass-through [A] [A]	●	●
Remove the ceiling plate	●	●

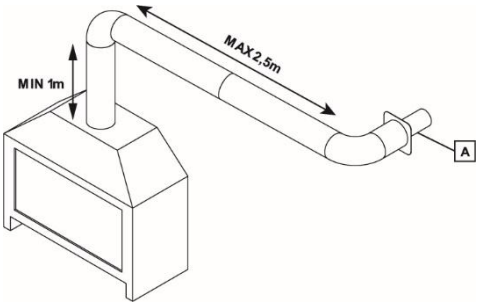

Configuration 3a		
	Gi105/59F, Gi110/55C, Gi115/55S, Gi105/79F, Gi110/75C, Gi115/75S	Gi105/59F, Gi110/55C, Gi115/55S, Gi105/79F, Gi110/75C, Gi115/75S
Gas type	G20, G25	G30, G31
Flue duct diameter 130/200 mm	●	●
Max. vertical length (m)	12 m.	12 m.
1st metre vertical (min 1 m)	●	●
Vertical elbow 90°	●	●
Remove the ceiling plate	2,5	2,5
Horizontal elbow 90°	●	●
Wall pass-through [A]	●	●
Remove the ceiling plate	●	●

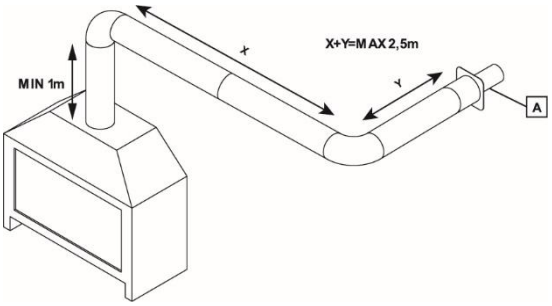

Configuration 3b		
	Gi105/59F, Gi110/55C, Gi115/55S, Gi105/79F, Gi110/75C, Gi115/75S	Gi105/59F, Gi110/55C, Gi115/55S, Gi105/79F, Gi110/75C, Gi115/75S
Gas type	G20, G25	G30, G31
Flue duct diameter 130/200 mm	●	●
Max. vertical length (m)	12 m.	12 m.
1st metre vertical (min 1 m)	●	●
Vertical elbow 90°	●	●
Horizontal section x + y (max m)	2,5	2,5
horizontal elbow 90°	●	●
Wall pass-through [A]	●	●
Remove the ceiling plate	●	●

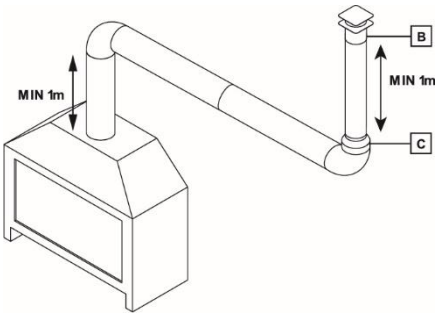

Configuration 4a		
	Gi105/59F, Gi110/55C, Gi115/55S, Gi105/79F, Gi110/75C, Gi115/75S	Gi105/59F, Gi110/55C, Gi115/55S, Gi105/79F, Gi110/75C, Gi115/75S
Gas type	G20, G25	G30, G31
Flue duct diameter 130/200 mm	●	●
Max. vertical length (m)	12 m.	12 m.
1st metre vertical (min 1 m)	●	●
Vertical elbow 90°	●	●
Remove the ceiling plate	3	3
Vertical elbow 90°	●	●
Connector 130/200 - 100/150 [C]	●	●
Vertical 100/150 (min 1 m)	○	○
Roof pass-through [B]	○	○
Remove the ceiling plate		●

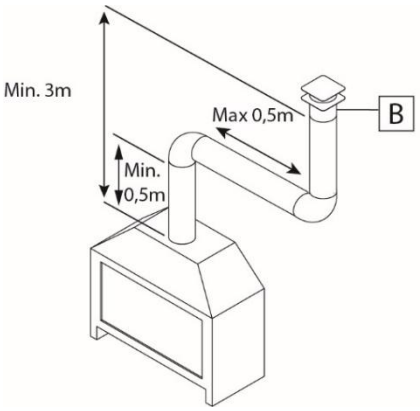

Configuration 4b		
	Gi105/59F, Gi110/55C, Gi115/55S, Gi105/79F, Gi110/75C, Gi115/75S	Gi105/59F, Gi110/55C, Gi115/55S, Gi105/79F, Gi110/75C, Gi115/75S
Gas type	G20, G25	G30, G31
Flue duct diameter 130/200 mm	●	●
Max. vertical length (m)	12 m.	12 m.
1e meter verticaal (min 0,5m)	●	●
Vertical elbow 90°	●	●
Horizontal section (max 0.5 m)	●	●
Vertical elbow 90°	●	
Min. vertical length (3 m)	●	●
Roof pass-through [B]	●	●
Remove the ceiling plate		●

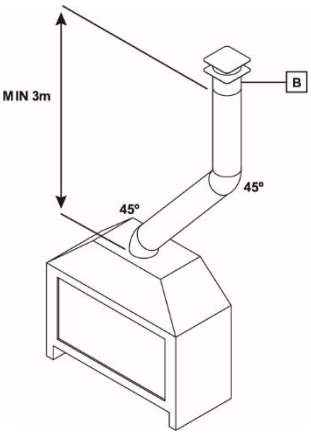

Configuration 5a		
	Gi105/59F, Gi110/55C, Gi115/55S, Gi105/79F, Gi110/75C, Gi115/75S	Gi105/59F, Gi110/55C, Gi115/55S, Gi105/79F, Gi110/75C, Gi115/75S
Gas type	G20, G25	G30, G31
Flue duct diameter 130/200 mm	●	●
Max. vertical length (m)	12 m.	12 m.
Elbow 15°, 30° of 45°	●	●
Diagonal section	●	●
Elbow 15°, 30° of 45	●	●
Min. vertical length (2 m)	●	●
Roof pass-through [B]	●	●

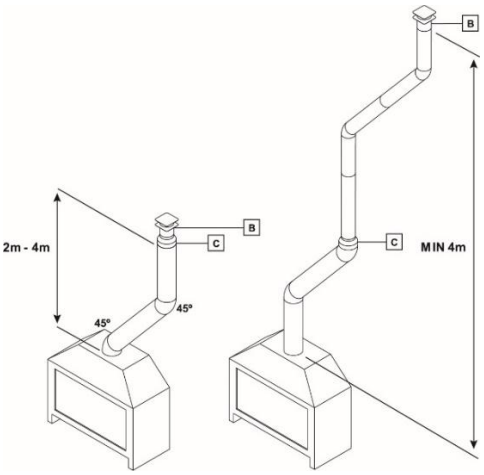

Configuration 5b		
	Gi105/59F, Gi110/55C, Gi115/55S, Gi105/79F, Gi110/75C, Gi115/75S	Gi105/59F, Gi110/55C, Gi115/55S, Gi105/79F, Gi110/75C, Gi115/75S
Gas type	G20, G25	G30, G31
Flue duct diameter 130/200 mm	●	●
Max. vertical length (m)	12 m.	12 m.
Elbow 15°, 30° of 45°	●	●
Diagonal section	●	●
Elbow 15°, 30° of 45°	●	●
Min. vertical length (2/4 m)	●	●
Connector 130/200 - 100/150 [C]	●	●
Roof pass-through [B]	○	○

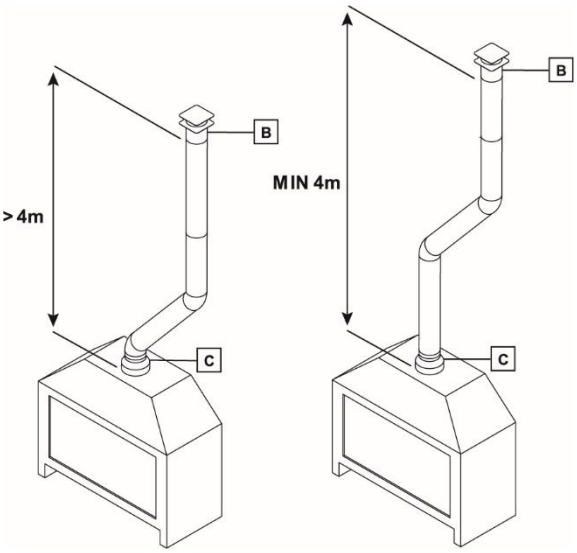

Configuration 5c		
	Gi105/59F, Gi110/55C, Gi115/55S, Gi105/79F, Gi110/75C, Gi115/75S	Gi105/59F, Gi110/55C, Gi115/55S, Gi105/79F, Gi110/75C, Gi115/75S
Gas type	G20, G25	G30, G31
Flue duct diameter 130/200 mm	●	●
Max. vertical length (m)	12 m.	12 m.
Connector 130/200 - 100/150 [C]	●	●
Elbow 15°, 30° of 45°	○	○
Diagonal section	○	○
Elbow 15°, 30° of 45°	○	○
Min. vertical length (4 m)	○	○
Roof pass-through [B]	○	○

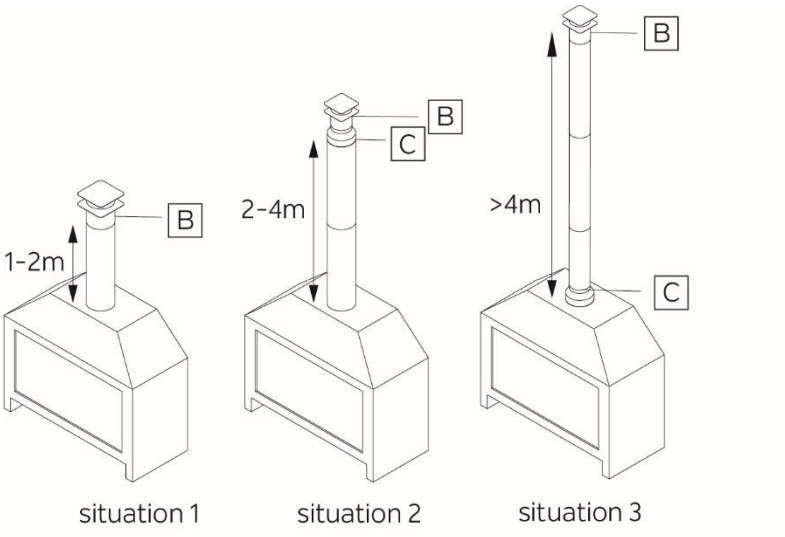

Configuration 6		
	Gi105/59F, Gi110/55C, Gi115/55S, Gi105/79F, Gi110/75C, Gi115/75S	Gi105/59F, Gi110/55C, Gi115/55S, Gi105/79F, Gi110/75C, Gi115/75S
Gas type	G20, G25	G30, G31
Flue duct diameter 130/200 mm	●	●
Max. vertical length (m)	12 m.	12 m.
Situation 1		
Connector 130/200 - 100/150 [C]	n.a.	n.a.
Min 1 m - Max 2 m vertical 130/200	●	●
Roof pass-through [B]	●	●
Situation 2		
Min 2 m - Max 4 m vertical 130/200	●	●
Connector 130/200 - 100/150 [C]	●	●
Roof pass-through [B]	○	○
Situation 3		
Connector 130/200 - 100/150 [C]	●	●
Min 4 m - Max 12 m vertical 100/150	○	○
Roof pass-through [B]	○	○

8.2 Explanation and Applications of Relay Connector

Type	Pin #	Gi ON	Gi OFF	Remarks:	Applications:
Relay-contact	1 2			Max. 230 V, 2A cos(ϕ1).	Turning on/off an external fan, light, or gas supply.
Safety Contact	3 4	The Gi checks the status of this input; it must be closed before the start of the ignition cycle and during the operational status of the Gi. If it is opened, the Gi is deactivated, and a fault error is generated, putting the Gi in a lockout status. This is automatically reset when the input is closed.			Shut Down Switch, door contact switch, extractor hood, mechanical ventilation, negative pressure sensor, hotel switch
Safety Contact	5 6	The Gi checks the status of this input; it must be closed before the start of the ignition cycle and during the operational status of the Gi. If it is opened, the Gi is deactivated, and a fault error is generated, putting the Gi in a lockout status. This is automatically reset when the input is closed.			Shut Down Switch, door contact switch, extractor hood, mechanical ventilation, negative pressure sensor, hotel switch.
Safety Contact	7 8	The Gi monitors the status of this input; it must be closed before the start of the ignition cycle and during the operational status of the Gi. If it is opened, the Gi is deactivated, a fault error is generated, and the Gi enters a lockout status. A manual RESET is required.			Carbon monoxide sensor, gas leak detection sensor.

8.3 Product card – part 1

(in conformance with (EU) 2015/1186 Appendix IV)

Model	Gas type	Energy efficiency class*	Nominal heat output (kW)	Minimum heat output (kW)	Energy efficiency index (EEI)	Useful return at nominal heat output (%)	Useful return at minimum heat output (%)
Kalfire Gi75/59F Kalfire Gi80/55C Kalfire Gi85/55S	G25.3	D	6,8	1,8	73,9	76	63,5
	G20	D	6,6	2,0	72,9	75,1	65,3
	G30 30 mbar	C	7,3	1,8	77,1	79,1	71,7
	G30 50 mbar	C	7,3	1,8	77,1	79,1	71,7
	G31 37 mbar	D	6,1	1,5	73,5	75,9	65,4
Kalfire Gi105/59F Kalfire Gi105/79F Kalfire Gi110/55C Kalfire Gi110/75C Kalfire Gi115/55S Kalfire Gi115/75S	G25.3	C	6,8	1,9	79	81,1%	73,3
	G20	C	6,9	2,0	77,6	79,7%	68,6
	G30-30 mbar	C	7,3	1,8	77,8	79,8%	69,2
	G30 –50 mbar	C	7,3	1,8	77,8	79,8%	69,2
	G31 37 mbar	D	5,6	1,8	76	78,6	67,9

Note: NOx values per model and gas type are listed in the technical tables in Appendix 8.6.

8.4 Product card – part 2

(in conformance with (EU) 2015/1186 Appendix IV)

Type of heat output/room temperature control	
single stage heat output, no room temperature control	no
two or more manual stages, no room temperature control	no
with mechanic thermostat room temperature control	no
with electronic room temperature control	yes
with electronic room temperature control plus day timer	no
with electronic room temperature control plus week timer	no
Other control options	
room temperature control, with presence detection	no
room temperature control, with open window detection	no
with distance control option	yes
with adaptive start control	no
with working time limitation	no
with black bulb sensor	no
Indirect heating functionality	no
Pilot flame power requirement	N.A.

Electricity consumption

	Consumption in standby mode (kWh)	**Consumption at minimum heat output (kWh)**	**Consumption at nominal heat output (kWh)**
Fireplace turned off	0,0053	-	-
Fireplace turned off - EmberGlow on	0,0175	-	-
Fireplace turned on	-	0,0348	0,0388
Fireplace turned on - EmberGlow on	-	0,049	0,051
Fireplace turned on - NSG on	-	0,0368	0,0433
Fireplace turned on - EmberGlow on -NSG on	-	0,0547	0,0567

NB: The electricity consumption is the same for all Kalfire Gi models.

8.5 Configuration of the decorative elements

8.5.1 Placing the decorative elements

Kalfire Gi75/59F, Gi80/55C, Gi85/55S

CAREFUL!

The decorative elements must be placed according to the instructions. It is prohibited to alter the number of decorative elements or the configuration thereof. Such alterations can lead to hazardous situations with regard to fire safety. Take the instructions into account: Safety instructions for decorative elements, paragraph 2.4.

	Artikel nr.	Artikel omschrijving	Aantal
1	550057	Cover log F060683	1
2	550138	Cover log KF04894	1
3	550159	Cover log KF06039	1
4	529170	Burner log SST3	1
5	550129	Burner cover Gi KF03661	1
6	550137	Cover log NSG Gi KF03691	1
7	550135	Cover log Y Gi KF03664	1
8	550130	Deco plate Glow Gi KF03657	1
9	529129	Burner log CRB1	1
10	550158	Cover log KF06035	1
11	610015	Filling Glass GP	1
12	550133	Black Granite KF03660	1

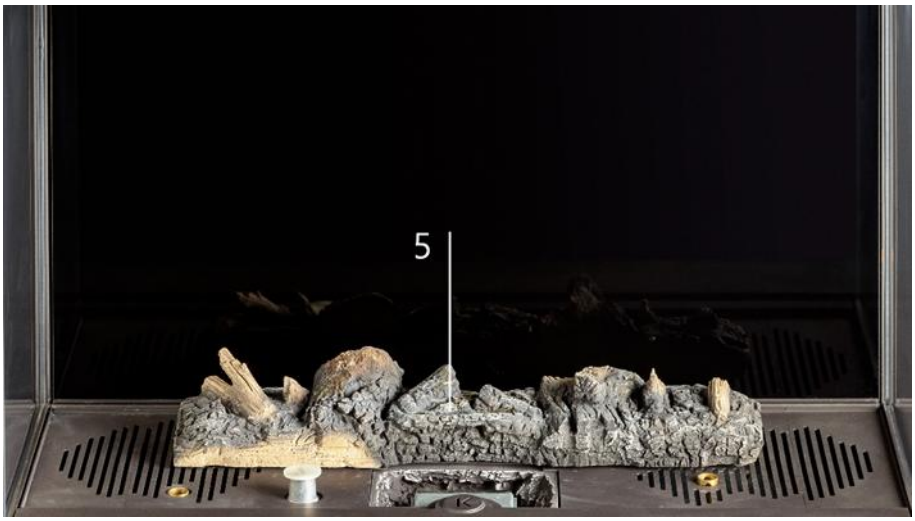
5

3
8

10
1

4
2

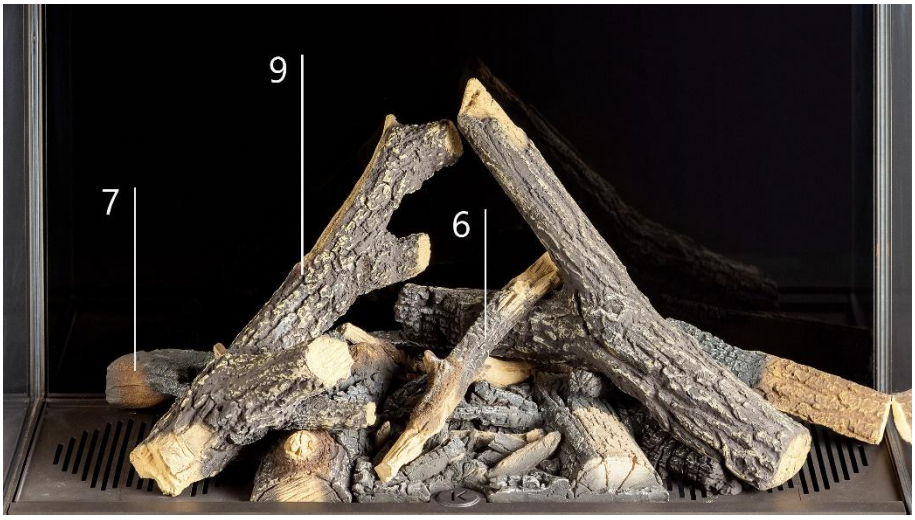
9
7
6

11
11

12
12

8.5.2 Placing the decorative elements
Kalfire Gi105/59F, Gi110/55C, Gi115/55S, Gi105/79F, Gi110/75C, Gi115/75S

⚠ **CAREFUL!**
The decorative elements must be placed according to the instructions. It is prohibited to alter the number of decorative elements or the configuration thereof. Such alterations can lead to hazardous situations with regard to fire safety. Take the instructions into account: Safety instructions for decorative elements, paragraph 2.4.

	Article nr.	Article description	Number
1	550129	Burner cover Gi KF03661	1
2	550132	Deco plate back Gi KF03655	1
3	550130	Deco plate Glow Gi KF03657	1
4	550131	Deco Cover log NSG Gi KF03653	1
5	550134	Cover log 1 Gi KF03662	1
6	550138	Cover burner log SST3	1
7	529170	Burner log SST3	1
8	550135	Cover log Y Gi KF03664	1
9	529129	Burner log CRB1	1
10	550137	Cover log NSG Gi KF03691	1
11	610015	Filling Glass GP	1
12	550133	Black Granite KF03660	1
13	550136	Cover log 2 Gi KF03658	1

1

2

3

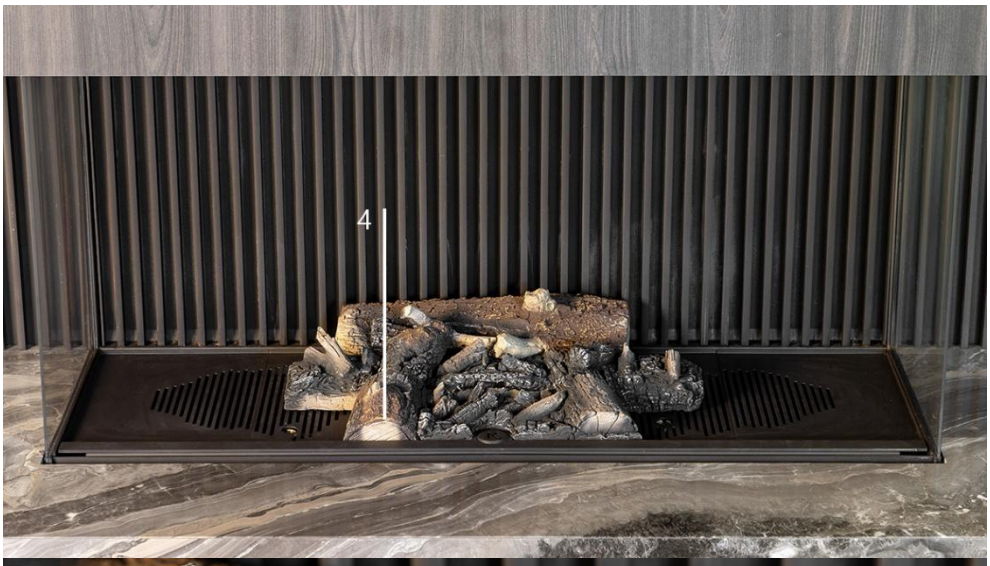
4

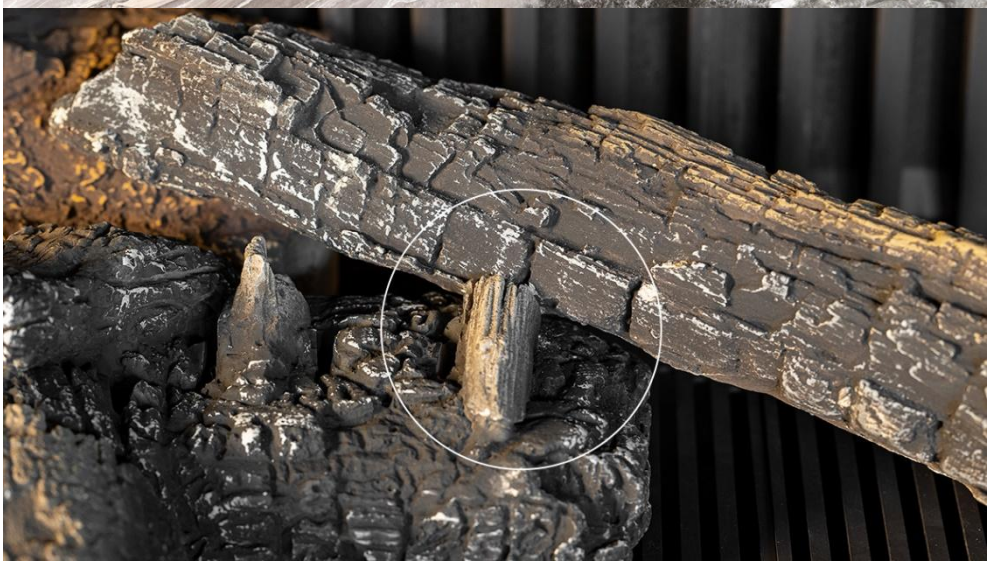

5

6

7

8

9

10

11
11

12
12

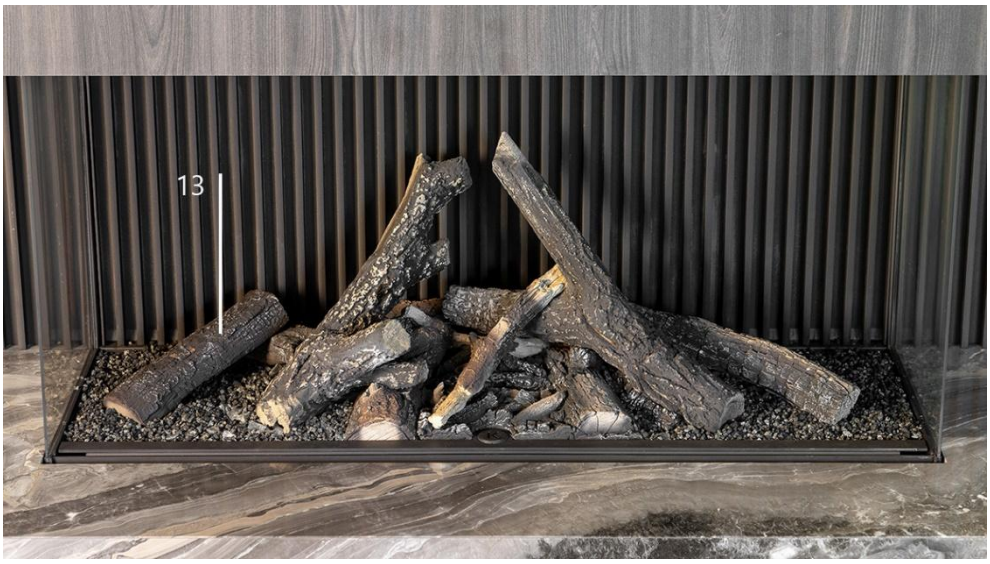
13

8.6 Technical specifications by appliance

KALFIRE Gi75/59F, Gi80/55C, Gi85/55S												
Gas cat.	Gas type	Connection pressure	Load MAX (Hi) kw (input)	Use m^3/h	Injector Code (mm)	Burner pressure maximum mbar	Burner pressure minimum mbar	Power maximum kW (output)	Efficiency (%)	NOx emissions (mg/kWh) (according to (EU) 2024/1103)	Energy efficiency class	Seasonal space heating energy efficiency (according to (EU) 2024/1103) (%)
I2H	G20	20	8,7	0,92	2x 1,6 + 1,8	15,5	5,8	6,6	75	79,8	D	69,3
I2E	G20	20	8,7	0,92	2x 1,6 + 1,8	15,5	5,8	6,6	75	79,8	D	69,3
I2E+	G20/G25	20/25	8,7	0,92	2x 1,6 + 1,8	15,5	5,8	6,6	75	79,8	D	69,3
I2(43,46 - 45,3 MJ/m3 (0°C))//I2K	G25.3	25	8,9	1,07	2x 1,6 + 1,8	19,6	7,3	6,8	76	74,0	D	70,1
I2ELL	G20/G25	20	8,4	1,03	2x 1,6 + 1,8	16,8	7,3	6,3	75	79,8	D	69,3
I3+	G31	37	8	0,32	2x 1,0 + 1,4	11,1	3,9	6,1	76	78,6	D	70,0
I3+	G30	28-30	9,2	0,28	2x 1,0 + 1,4	11,3	4,1	7,3	79	82,8	C	73,0
I3B/P	G30	28-30	9,2	0,28	2x 1,0 + 1,4	11,3	4,1	7,3	79	82,8	C	73,0
I3B/P	G30	50	9,2	0,28	2x 1,0 + 1,4	11,3	4,1	7,3	79	82,8	C	73,0

KALFIRE Gi105/59F, Gi110/55C, Gi115/55S												
Gas cat.	Gas type	Connection pressure	Load MAX (Hi) kw (input)	Use m^3/h	Injector Code (mm)	Burner pressure maximum mbar	Burner pressure minimum mbar	Power maximum kW (output)	Efficiency (%)	NOx emissions (mg/kWh) (according to (EU) 2024/1103)	Energy efficiency class	Seasonal space heating energy efficiency (according to (EU) 2024/1103) (%)
I2H	G20	20	8,7	0,92	2x 1,6 + 1,8	15,5	6,5	6,9	80	71,1	C	73,6
I2E	G20	20	8,7	0,92	2x 1,6 + 1,8	15,5	6,5	6,9	80	71,1	C	73,6
I2E+	G20/G25	20/25	8,7	0,92	2x 1,6 + 1,8	15,5	6,5	6,9	80	71,1	C	73,6
I2(43,46 - 45,3 MJ/m3 (0°C))//I2K	G25.3	25	8,5	1,02	2x 1,6 + 1,8	19,4	7,1	6,8	81	56,7	C	74,8
I2ELL	G20/G25	20	8,7	0,92	2x 1,6 + 1,8	15,5	6,5	6,9	80	71,1	C	73,6
I3+	G31	37	7,1	0,29	2x 1,0 + 1,4	14,7	4,2	5,6	79	71,1	C	72,5
I3+	G30	28-30	9,1	0,28	2x 1,0 + 1,4	14.2	4,2	7,3	80	71,1	C	73,7
I3B/P	G30	28-30	9,1	0,28	2x 1,0 + 1,4	14,2	4,2	7,3	80	71,1	C	73,7
I3B/P	G30	50	9,1	0,28	2x 1,0 + 1,4	14,2	4,2	7,3	80	71,1	C	73,7

KALFIRE Gi105/79F, Gi110/75C, Gi115/75S												
Gas cat.	Gas type	Connection pressure	Load MAX (Hi) kw (input)	Use m^3/h	Injector Code (mm)	Burner pressure maximum mbar	Burner pressure minimum mbar	Power maximum kW (output)	Efficiency (%)	NOx emissions (mg/kWh) (according to (EU) 2024/1103)	Energy efficiency class	Seasonal space heating energy efficiency (according to (EU) 2024/1103) (%)
I2H	G20	20	8,7	0,92	2x 1,6 + 1,8	15,5	6,5	6,9	80	71,1	C	73,6
I2E	G20	20	8,7	0,92	2x 1,6 + 1,8	15,5	6,5	6,9	80	71,1	C	73,6
I2E+	G20/G25	20/25	8,7	0,92	2x 1,6 + 1,8	15,5	6,5	6,9	80	71,1	C	73,6
I2(43,46 - 45,3 MJ/m3 (0°C))//I2K	G25.3	25	8,5	1,02	2x 1,6 + 1,8	19,4	7,1	6,8	81	56,7	C	74,8
I2ELL	G20/G25	20	8,7	0,92	2x 1,6 + 1,8	15,5	6,5	6,9	80	71,1	C	73,6
I3+	G31	37	7,1	0,29	2x 1,0 + 1,4	14,7	4,2	5,6	79	71,1	C	72,5
I3+	G30	28-30	9,1	0,28	2x 1,0 + 1,4	14.2	4,2	7,3	80	71,1	C	73,7
I3B/P	G30	28-30	9,1	0,28	2x 1,0 + 1,4	14,2	4,2	7,3	80	71,1	C	73,7
I3B/P	G30	50	9,1	0,28	2x 1,0 + 1,4	14,2	4,2	7,3	80	71,1	C	73,7

8.8 Country overview

			AT	BE	BG	CH	CY	CZ	DE	DK	EE	EL	ES	FI	FR	GB	HU	IE	IT
I2H	G20	20 mbar	√		√	√	√	√		√	√	√	√	√		√	√	√	√
I2E	G20	20 mbar							√										
I2E+	G20/ G25	20/25 mbar		√											√				
I2(43,46 – 45,3 MJ/m3 (0°C))//I2K	G25.3	25 mbar																	
I2ELL	G20 G25	20 mbar 20 mbar							√										
I2L																			
I3+	G30 G31	28-30 mbar 37 mbar		√		√	√	√				√	√		√	√		√	√
I3B/P	G30	28-30 mbar			√		√	√		√	√	√		√					
I3B/P	G30	50 mbar	√			√			√								√		

			LB*	LT	LU	LV	MT	NL	NO	NZ*	PL	PT	RO	RU*	SE	SI	SK	TN*	UA*
I2H	G20	20 mbar		√		√	√					√	√		√	√	√		
I2E	G20	20 mbar			√						√								
I2E+	G20/G25	20/25 mbar	√											√				√	√
I2(43,46 – 45,3 MJ/m3 (0°C))//I2K	G25.3	25 mbar						√		√									
I2ELL	G20 G25	20 mbar 20 mbar																	
I2L								√		√									
I3+	G30 G31	28-30 mbar 37 mbar	√	√		√	√					√		√				√	√
I3B/P	G30	28-30 mbar		√				√	√	√	√		√		√	√	√		
I3B/P	G30	50 mbar			√														

** According to the CEN-CENELEC Internal Regulations, the national standards organizations of these countries are not bound to implement this European Standard.*

8.9 Declaration of conformity

Kalfire B.V.
Geloërveldweg 21
NL - 5951 DH, Belfeld

Declares, that this declaration of conformity is issued under our full responsibility they belong to the models below.

Product: local gas fire according to the convection principle
Type: C11,C31, C91
Product name: Kalfire

Kalfire Gi75/59F, Gi80/55C, Gi85/55S
Kalfire Gi105/59F, Gi110/55C, Gi115/55S,
Kalfire Gi105/79F, Gi110/75C, Gi115/75S

This declaration of conformity is issued in accordance with the Union Harmonisation Legislation:

Directive 2009/125/EC, Regulation (EU) 2024/1103 (from 18 April 2024)
Directive 2009/142/EC, Regulation (EU) 2016/426 (from 21 April 2018)
Directive 2010/30/EU, Regulation (EU) 2015/1186 (from 24 April 2015)

Applied standards or other technical specifications to which this declaration relates:

NEN-EN 613 (2022)
NEN-EN 437 (2021)

Notified body:

Certigaz
Rue du Général Leclerc CS-60264
92047 PARIS LA DEFENSE CEDEX
France

Date: 1-7-2025
Drs. Ing. Beijko van Melick Msc.

Managing Director
Kalfire BV

KALFIRE
FIREPLACES

Geloërveldweg 21
5951 DH Belfeld
info@kalfire.com
KALFIRE.COM

V07-2025 EN