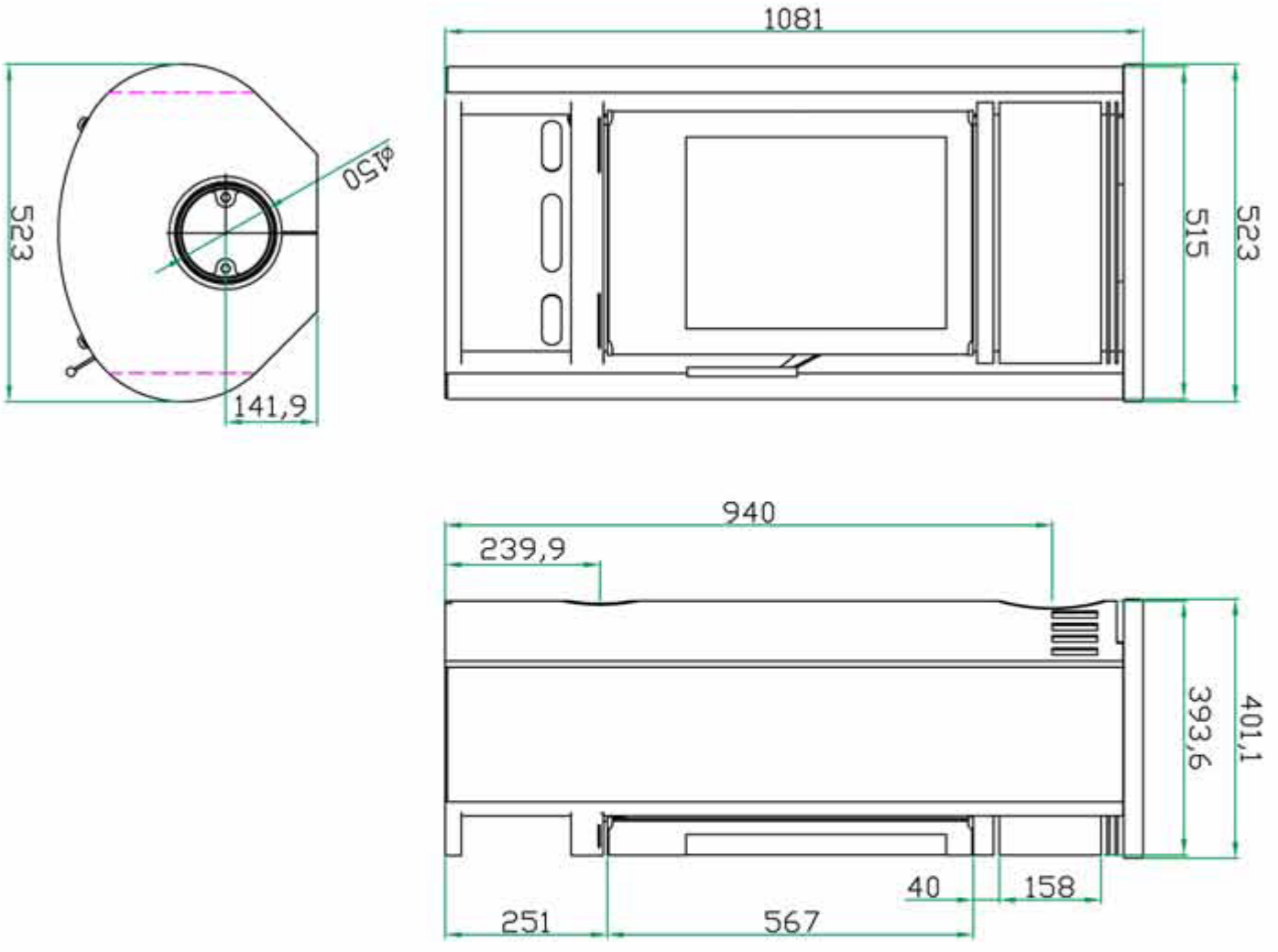

NF W20 blackline