morsø
DANISH DESIGN SINCE 1853

MORSØ FORNO GAS BBQ



MORSØ FORNO GAS
Piccolo R-238



MORSØ FORNO GAS
Medio SQ-330



MORSØ FORNO GAS
Grande R-506

Important: Retain these instructions for future use. UK

CE 51CS4816

MORSØ FORNO GAS *Piccolo* R-238

Morsø Forno Gas Piccolo - UK 3

MORSØ FORNO GAS *Medio* SQ-330

Morsø Forno Gas Medio - UK 15

MORSØ FORNO GAS *Grande* R-506

Morsø Forno Gas Grande - UK 27

morsø
DANISH DESIGN SINCE 1853

MORSØ FORNO GAS BBQ



MORSØ FORNO GAS *Piccolo*

UK

R-238

- Powerful stainless steel burner with rotary ignition for easy lighting
- Satin enamelled cast iron cooking grate – easy to cook on and clean
- Durable die cast aluminium bowl and hood
- Integrated thermometer
- High dome hood – 14.5 cm
- Table available as an optional extra (sold separately)
- Supplied with hose and regulator so it's ready to use with a POL gas cylinder
- Gas certified to CE standards

Important: Retain these instructions for future use.

CE 51CS4816

READ ME FIRST

Gas leak testing

It is important that you leak test the BBQ before first use and every time the gas cylinder is refilled and reconnected to the BBQ.

To Complete Leak Test

- Make sure all the control knobs are OFF.
- In a small container, mix up a solution of water and detergent/soap.
- Mix the solution well (about the same concentrate as washing up water).
- Turn the cylinder ON by rotating the knob to open position.
- Using a brush or spay bottle apply the soap solution to the gas line and each join in the gas line including:
  - the gas connection at the inlet of the BBQ
  - all gas hose connections
  - the gas connection at the gas cylinder
- If bubbles appear, there is a gas leak.
- If the leak is at the connection, re-tighten and re-seal.
- If the leak is anywhere else or you cannot resolve the leak by tightening the connection DO NOT PROCEED.
- Replace gas hose and regulator.
- Replacement hose and regulators can be purchased from your local BBQ retail specialist.

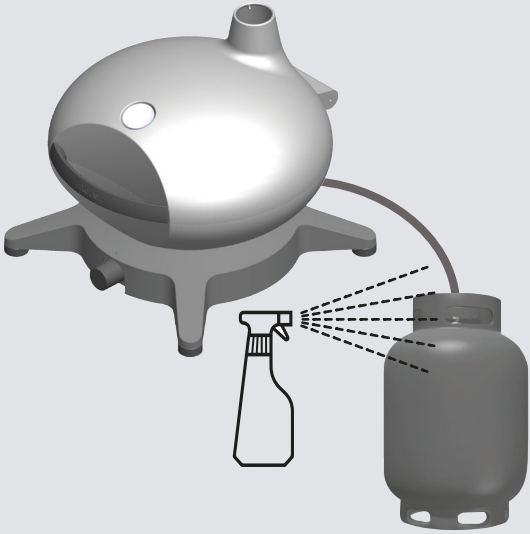

GENERAL INFORMATION

IMPORTANT

Read these instruction carefully prior to use. Familiarise yourself with the appliance before connecting it to it's gas container. Keep these instructions for future reference.

IF YOU SMELL GAS

1. Shut off gas to the barbecue at its source, if possible.
2. Extinguish any open flame.
3. Open hood.
4. If odour continues immediately call your gas supplier or fire department.

Replacement of pressure control and hose connector shall be carried out using Morsø genuine products only. Contact your local dealer.

NOTE: If it is a gas product, the thread between the gas hose and the grill is fastened the other way around (anti-clockwise).

Gas Installation Codes

- Barbecues must be used in accordance with the installation requirements of your gas supply authority.
- Barbecues for use with bottled gas are labelled 'propane gas' or 'Universal L.P.G'.

Clearances

Minimum Clearances from combustible materials must be: Rear - 300mm Sides - 300mm Above - 1000mm

Specifications

Barbecue specifications can be found on the data label attached to the barbecue body.

Hose & Regulator Safety

The regulator and hose assembly supplied with the appliance are suitable for Propane & Butane mix Gas only. The type of regulator to be used with the product must comply with standard EN16129. The pressure regulator and hose assembly supplied with the Morsø Forno Gas must be used. **Replacement of pressure control and hose connector shall be carried out using Morsø genuine products only.** Contact your local dealer.

The gas regulator and hose must be replaced at a minimum within the legally required interval in your country. Morsø Jernstøberi recommends replacing them at least every three years. Always remember to perform a leak test on the regulator and hose before using the grill. When connecting the hose and regulator assembly to the gas cylinder, take care to avoid unnecessary twist- ing of the flexible hose.



Twist Fold Perish

After the assembly has been secured, turn on the gas and check for leaks by brushing a soap and water solution over all connections.

If you are unable to correct the leak by tightening the connections, turn off the gas and contact the supplier immediately.

Always ensure the Morsø Forno Gas is kept away from flammable materials and the gas cylinder clear of any heat source.

When changing over from an empty gas cylinder to a full one, make sure this procedure is carried out in a well ventilated location, outside, away from people and away from any sources of ignition; such as nakedflames, pilotflames, electric heaters/equipment.

Gas Cylinder Use & Safety

This is a low pressure barbecue and must only be used with the regulator supplied. Your barbecue is designed for use with propane gas cylinders certified to the UK market. The gas cylinder should be filled by a reputable gas supplier and visually inspected and re-qualified at each filling.

Always keep cylinder in an upright position. Always close the cylinder valve when the barbecue is not in use.

Do not subject gas cylinder to excessive heat.

NEVER STORE YOUR GAS CYLINDER INDOORS

If you store your barbecue indoors, ALWAYS disconnect the gas cylinder first and store the cylinder safely outside. Cylinders must be stored outdoors in a well ventilated area out of reach of children, and must not be stored in a building, garage or any other enclosed area.

GENERAL INFORMATION



FOR YOUR SAFETY

Failure to comply with these instructions could result in a fire or explosion which could cause serious bodily injury, death or property damage.

CAUTION: Accessible parts may be very hot.

Keep young children away.

DO NOT modify this appliance.

DO NOT move this barbecue during use.

Turn off gas supply at the gas cylinder after use.

Parts sealed by the manufacturer or their agent must not be manipulated by the user. This barbecue is only to be used and stored outdoors.

- Never operate this barbecue without a regulator.
- Do not test for gas leaks with an open flame.
- If this information is not followed exactly a fire causing death or serious injury may occur. Do not store a spare gas cylinder under or near this barbecue. This barbecue is only to be used and stored outdoors.
- If there is a leak on your appliance (smell of gas) immediately attempt to turn off the cylinder valve. Remove the appliance to a well ventilated location away from any ignition source. Only check for leaks outdoors using soapy water. DO NOT try to detect leaks using a flame.
- Check for leaks by brushing a soap and water solution over all connections. If you are unable to correct the leak by tightening the connections, turn off the gas and contact customer service immediately.
- Only use the hose assembly as supplied with this appliance for connection to the cylinder - DO NOT USE ADAPTERS.
- Maximum hose length - 1000mm.
- After use turn the gas cylinder valve off, wait for the flame to go out, then turn the appliance control valve off.
- Avoid twisting or kinking the flexible hose.
- Do not store or use petrol or other flammable liquids in the vicinity of this or any other appliance.
- Do not store empty or full spare gas cylinders under or near this or any other appliance.
- Never test for gas leaks with a lit match or open flame. Never light barbecue with hood closed or before checking to ensure the burner tubes are fully seated over gas valve orifices.
- Never lean over cooking surface when lighting.
- Never alter or modify the regulator or gas supply assembly.
- This barbecue must not be used indoors.
- Only use in well ventilated areas.
- **Carbon monoxide hazard - Using this appliance in an enclosed space may cause death. Do not use in caravans, tents, marine craft, cars, mobile homes or similar locations.**
- This appliance shall only be used in an above ground open-air situation with natural ventilation, without stagnant areas, where gas leakage and products of combustion are rapidly dispersed by wind and natural convection.
- Ensure the barbecue is set up on a level and stable surface.
- Do not move the barbecue while in use or when hot. Remove the drip tray before moving.
- DO NOT use the BBQ as a hotplate. The warranty will be voided and it violates the gas regulations, the cooking grate provides the ventilation needed for the BBQ to operate safely. It is not designed to be a solid hotplate device.

IF THERE IS A LEAK

- Turn the cylinder off.
- Ventilate the area to disperse gas.
- Check all connections.
- If leak persists, keep the cylinder upright. Keep skin away from any gas or liquid escaping from the cylinder.
- Keep the cylinder at least 20 metres away from any sparks or ignition sources, including electrical equipment, camera flashes, engines and motors.
- Disperse gas by encouraging maximum ventilation and spraying with a fine water spray.

IF THERE IS A FIRE

- If the fire is at the barbecue, turn the gas off at the cylinder. Smother the flames with a wet cloth, fire blanket or extinguish using a fire extinguisher.
- If the fire is at the cylinder, or you can not get to the valve to turn the gas off, contact the fire brigade immediately.
- Using a garden hose, direct the water to the middle of the cylinder to keep it cool. Try not to extinguish the flame. At least if the gas is burning, it won't be able to build up pressure and explode.

Location of your Barbecue

DO NOT use your barbecue in garages, porches, sheds, breezeways, or other enclosed areas. Your barbecue is to be used OUTDOORS. The barbecue is not intended to be installed in or on recreational vehicles and/or boats and should not be placed under any surface that will burn. Do not obstruct the flow of combustion and ventilation air around the barbecue housing.

Protect Children
Keep children away from barbecue during use and until barbecue has cooled after you have finished. Do not allow children to operate barbecue.

Always ensure that no sporting or physical activities are carried out in close proximity to the barbecue during use and while still hot.

Tools You Will Need
Adjustable spanner, Philips head screwdriver.

Check Barbecue for any Damage
Inspect barbecue parts as you proceed. Contact your supplier for assistance regarding replacement of any damaged or missing parts. Do not assemble or operate a barbecue that appears damaged. Barbecues for use with gas cylinders are labelled 'Propane Gas'. Check labelling at the gas connection on your barbecue.

Gas Category	☐ I3+(28-30/37)	☐ I3 B/P(30)	☐ I3 B/P(50)
Gas and Supply Pressure	G30 Butane at 28-30 mbar G31 Propane at 37 mbar	G30 Butane and G31 Propane at 30 mbar	G30 Butane and G31 Propane at 50 mbar
Country Code	BE, CH, CY, CZ, ES, FR, GB, GR, IE, IT, LT, LU, LV, PT, SK, SI	BE,CY, DK, EE, FR, GB, HU, IT, LT, NL, NO, SE, SI, SK, RO, HR, TR, BG, IS, LU, MT, FI	AT, CH, DE, SK
Burner	Main Burner × 1	Main Burner × 1	Main Burner × 1
Nominal Heat Input	3.6 kW	3.6 kW	3.6 kW
Burner Injector Size	Ø0.92 mm	Ø0.92 mm	Ø0.82 mm
Total Heat Input	3.6 kW（G30:262g/h；G31:257g/h）		Made in Taiwan

SUITABLE GAS TANKS
There are many different sizes of tank.
The figure shows the maximum tank size.

- Capacity of gas tank: Maximum 11kg
- Height of gas tank: Maximum 595 mm
- Diameter of gas tank: Maximum 304 mm

Location of gas tank
Make sure there are no kinks in the gas hose.
The gas hose may be a maximum of 1 m in length.

EXPLODED DIAGRAM

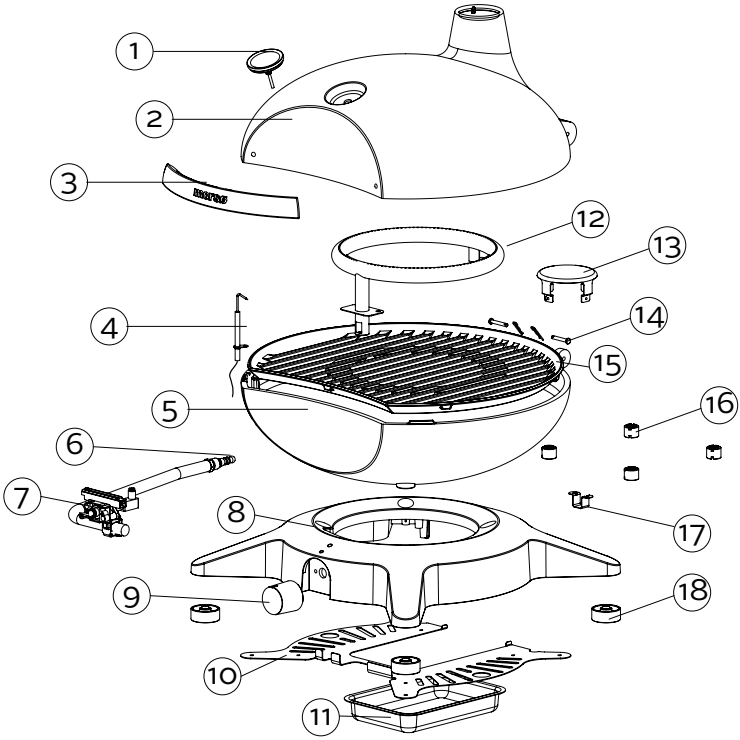

PARTS LIST

Part	Description	QTY
1	Temperature Gauge	1
2	Lid	1
3	Lid Handle	1
4	Ignition Electrode	1
5	Bowl	1
6	Adapter	1
7	Valve	1
8	Base	1
9	Knob	1
10	Grease Cup Support	1

Part	Description	QTY
11	Grease Cup	1
12	Burner	1
13	Overheating protection	1
14	Lid Hinge & R-Pin	2
15	Cooking Grate	1
16	Heat Insulator	4
17	Fixed Plate	1
18	Plastic Feet	4

ASSEMBLY INSTRUCTIONS

Remove any transit protection material.

STEP 1
Attach the lid handle using the fasteners as shown.

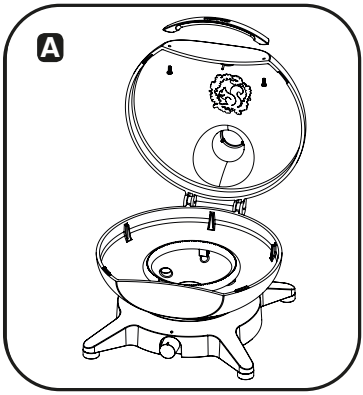

CONNECTING THE GAS CYLINDER

There are two different types of gas that can be used on your gas bbq depending on where you live, that being either butane or propane gas.
Both are supplied in gas cylinders.

The gas cylinder must be positioned at ground level at a plane flame-proof surface by the bbq.

The connection between the gas cylinder and the bbq is made with a regulator

It is important that you use the correct regulator for the particular type of gas you purchase.

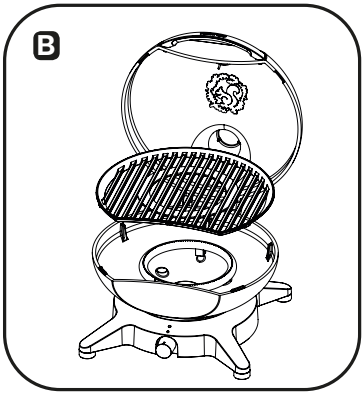

GENERAL INFORMATION

CONNECTING & DISCONNECTING TO GAS SOURCE

Familiarise yourself with the general information and safety guidelines located at the front of this manual.

Check

1. Gas cylinder is filled. A sloshing sound will be heard when shaken.
2. The burner control is in the 'OFF' position

Connecting

1. Ensure valve is in OFF position.
2. Check for any damage to the cylinder connection.
3. Attach the regulator to the cylinder valve.
4. Use a soapy water solution to check the joint. If bubbles appear the connection will need to be retightened.

Length	Width	Height
493 mm	436 mm	395 mm

IMPORTANT

- IMPORTANT: Before connecting and disconnecting barbecue to gas source, make sure burner controls are in 'OFF' position.
- CAUTION: When the barbecue is not in use, the gas cylinder must be disconnected.
- Check that the seals between the appliance and the gas cylinder are in place and in good condition before connecting the gas cylinder.
- Do not use this appliance if it has damaged or worn seals.
- NOTE: If for some reason, ignitor fails to produce a spark at the electrode, barbecue can be lit by a long barbecue match with hood open insert the match into a hole on the underside of the barbecue and turn gas control to high.
- Check performance of burner prior to installing barbecue plates.
- Do not smoke when attempting to ignite barbecue.
- Never use volcanic rock, heat beads or other material.
- Always use protective gloves when handling hot components.

IGNITION PROCEDURE

1. Raise the lid of the gas grill – set the cylinder valve to position ON.
2. Push in the gas control button and turn it anticlockwise. Hold the gas control button in this position for about 5 seconds, thus allowing the gas to stream up to the burner. Now, turn the button fully anti-clockwise until you hear a 'click/spark' and check whether the spark has lit the burner.
3. When the burner is lit, let go of the gas control button. You can now turn the control button from 'MAX' to 'MIN' depending on the required heat.
4. If the burner does not light, repeat 'step 2' two to three times, until the burner is lit.
5. If, after several attempts, the burner still does not light, cut off the gas supply and check whether the gas supply is blocked.

If reignition is necessary while the gas barbecue is still hot, you must wait for a minimum of 5 minutes before commencing to reignite (this allows accumulated gas fumes to clear).

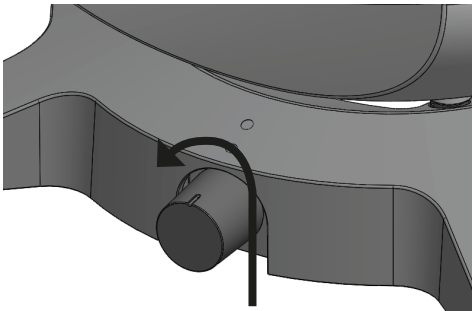

1. PUSH 2. TURN GENTLY

IMPORTANT

The hood must be in the open position for lighting.
Do not smoke at any time when attempting to ignite the barbecue burners.
Do not leave the barbecue unattended when alight.
NEVER cover the chimney, completely or partially.
Never cover the grilling grate with a pizza stone or the similar – owing to the risk of overheating.

OPERATION

BURNER OPERATION & IGNITION SYSTEM CHECK

Problem	Possible Reason	Solution
Burner will not ignite	Control knob is closed	Turn knob to high when lighting
	The ignition needle is faulty	The grill is lit using a long grill match with the lid open. Lead the match through the grilling grid while turning the gas control to the left.
Food is not cooking or is taking too long	Burner has gone out	Check that the gas bottle is not empty and reignite the burner
	Cooking surface was not given enough time to warm up before the food was applied	Remove the food and give the burner time to warm the cooking surface (5-10 mins)
	There is too much food on the cooking surface	Cook smaller portions

Should you experience difficulties when lighting up your grill, the following may help:
1. Adjustment of the 'Piezo' spark igniter: It is important to ensure that the 'Piezo' (spark) igniter is correctly positioned opposite the holes of the burner. The igniter may possibly have moved during transport or use. When the grill is cold, the 'Piezo' igniter can be carefully adjusted, using your fingers or a small pair of pincers. Make sure that the needle of the 'Piezo' igniter gets closer to the burner (a distance of about 1-3 mm between the tip of the needle and the burner) and that the needle is pointed at a hole in the burner.

2. Cleaning of the burner: Food scraps, fat, or other impurities may occasionally be deposited on the burner and thus block some of its holes. Make sure that the grill is cold, remove the grilling grid and use a soft wire brush – for instance the "Morsø Brush & Scraper Kit" – to cleanse the burner holes. If there are still blocked burner holes, a needle or a paper clip can be used to clear the holes. Be sure not to push the 'Piezo' burner during this process. Watch the "How to" video on morsoe.com

OPERATING PROCEDURE

Cooking: The control knob can be turned from 'MAX' to 'MIN' depending on the heat required.

IMPORTANT

Make sure to clean your appliance before its first use, and make sure that there are no packaging material left on the product.
Make sure to Heat the product at max temp for at least 15 minutes before using the product for the first time. If your product has a lid it needs to be pre heated with a closed lid.
Equipped with one burner, the Morsø Forno Gas Piccolo is thus extremely well-suited for direct grilling where a crisp and clearly defined rind or crackling is required – for meat as for vegetables.
Pizza-baking will require an increased grilling area.
The grilling grid must not be covered by any pizza stone, cooking plate or the similar, as this will obstruct heating circulation. Morsø Forno Medio and -Grande are, however, perfectly suited for this purpose.

MAINTENANCE:
In the course of regular use and exposure to the elements, there will always be wear and tear and patination of outdoor products. This is quite normal and, hence, also apply to the Morsø Outdoor products. Thus, the occurrence of scratches and the formation of corrosion will appear, but this is easily repaired by way of the Maintenance Kit for Morsø Forno Gas and Morsø Balcone. Using the maintenance kit, you can refresh your Morsø Forno Gas to make it appear almost new. You find an instruction video that explains the process on our website – morsoe.com.
We always recommend the use of a Morsø cover for the protection of your grill when it is not in use. Important! – Always make sure that your grill is completely dry and cooled off before putting on the cover.
A Morsø cover will also prevent the seepage of moisture and rainwater via the chimney and, thus, the risk of rust on the cast-iron grate, when the grill is not in use. If there is a breach in the enamel coating or enamel flakes have fallen off the Grill grate (or cooking area), then the grill grate needs to be replaced.

CARE & MAINTENANCE

As with all appliances, proper care and maintenance will keep them in top operating condition and prolong their life. Your new gas barbecue is no exception. By following these cleaning procedures on a timely basis, your barbecue will be kept clean and working properly with minimum effort.

Spiders and small insects occasionally spin webs or make nests in the burner tubes during warehousing and transit.

These webs can lead to a gas flow obstruction which could result in a fire in and around the burner tubes. Cleaning with a soft brush before use and at least every six months is recommended.

This type of problem is known as 'FLASH-BACK' and can cause serious damage to your barbecue and create an unsafe operating condition for the user. Although an obstructed burner tube is not the only cause of 'FLASHBACK' it is the most common cause and frequent inspection and cleaning of the burner tubes is necessary.

Flash-Back

If fire occurs in and around the burner, immediately turn off gas at its source and turn the burner control to 'OFF', wait until the barbecue has cooled, then clean the burner tubes and burner ports.

Cleaning the Cooking Surface

After cooking, turn burner control to 'OFF' and let barbecue cool before attempting to clean the grill plate or grate. Before first use and periodically, it is suggested that you wash the grill plate and grate in a mild soap and warm water solution.
Go to morsoe.com to watch the instruction video which explains how, easily and efficiently, you clean and maintain your grilling grate.

Care of Cooking Surface

Use and care of the cooking surface is important. Do not use pans on the cooking surface. Do not overheat the cooking surface with the hood down or no food on the cooking surface.

Cleaning the Drip Tray

To avoid fat or grease dripping from the barbecue remove and empty the drip tray after each use. Wait until the drip tray is cool to touch before disposing of contents.

The drip tray should be washed periodically in a mild detergent and warm water solution.
Watch the "How to" video on morsoe.com

IMPORTANT

- Beware of spiders and wasps. Burner tube should be inspected and cleaned periodically.
- This appliance should only be serviced by or under the guidance of an authorised professional.
- To avoid any flare-ups, it is recommended that the drip tray be checked and emptied regularly. Contents of the drip tray may be very hot during cooking. If emptied during extended cooking extreme caution should be taken and direct contact by hand should be avoided at all times. Allow to cool completely before disposing of the contents.

SAFE APPLIANCE LOCATIONS

This appliance shall only be used in an above ground open-air situation with natural ventilation, without stagnant areas, where gas leakage and products of combustion are rapidly dispersed by wind and natural convection.

Any enclosure in which the appliance is used shall comply with the following:

An enclosure with walls on all sides, but at least one permanent opening at ground level and no overhead cover.

Within a partial enclosure that includes an overhead cover and no more than two walls.

Within a partial enclosure that includes an overhead cover and more than two walls, the following will apply:

- at least 25% of the total wall area is completely open, and
- at least 30% of the remaining wall area is open and unrestricted.

In the case of balconies, at least 20% of the total wall area shall be and remain open and unrestricted.

DIAGRAMMATIC REPRESENTATI ONS OF OUTDOOR AREAS

The following figures are diagrammatic representations of outdoor areas. Rectangular areas have been used in these figures – the same principles apply to any other shaped area.

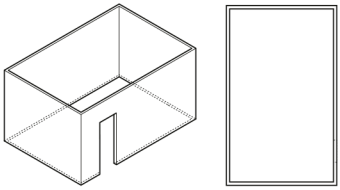

Outdoor Area - Example 1

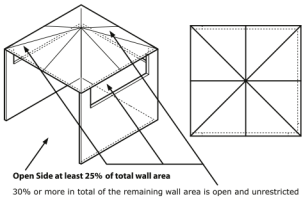

Outdoor Area - Example 4

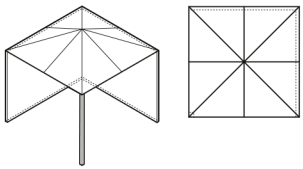

Outdoor Area - Example 2

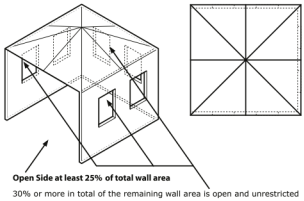

Outdoor Area - Example 5

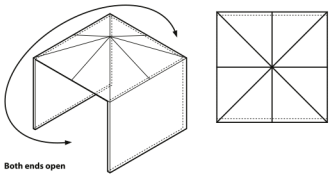

Outdoor Area - Example 3

morsø
DANISH DESIGN SINCE 1853

MORSØ FORNO GAS BBQ



MORSØ FORNO GAS *Medio*

UK

SQ-330

- Powerful stainless steel burner with rotary ignition for easy lighting
- Satin enamelled cast iron cooking grate – easy to cook on and clean
- Durable die cast aluminium bowl and hood
- Integrated thermometer for maximum control when cooking
- High dome hood – 17cms – allows you to cook roasts easily
- Table available as an optional extra (sold separately)
- Supplied with hose and regulator so it's ready to use with a POL gas cylinder
- Gas certified to CE standards

Important: Retain these instructions for future use.

CE 51CS4816

READ ME FIRST

Gas leak testing

It is important that you leak test the BBQ before first use and every time the gas cylinder is refilled and reconnected to the BBQ.

To Complete Leak Test

- Make sure all the control knobs are OFF.
- In a small container, mix up a solution of water and detergent/soap.
- Mix the solution well (about the same concentrate as washing up water).
- Turn the cylinder ON by rotating the knob to open position.
- Using a brush or spay bottle apply the soap solution to the gas line and each join in the gas line including:
  - the gas connection at the inlet of the BBQ
  - all gas hose connections
  - the gas connection at the gas cylinder
- If bubbles appear, there is a gas leak.
- If the leak is at the connection, re-tighten and re-seal.
- If the leak is anywhere else or you cannot resolve the leak by tightening the connection DO NOT PROCEED.
- Replace gas hose and regulator.
- Replace hose and regulators can be purchased from your local BBQ retail specialist.

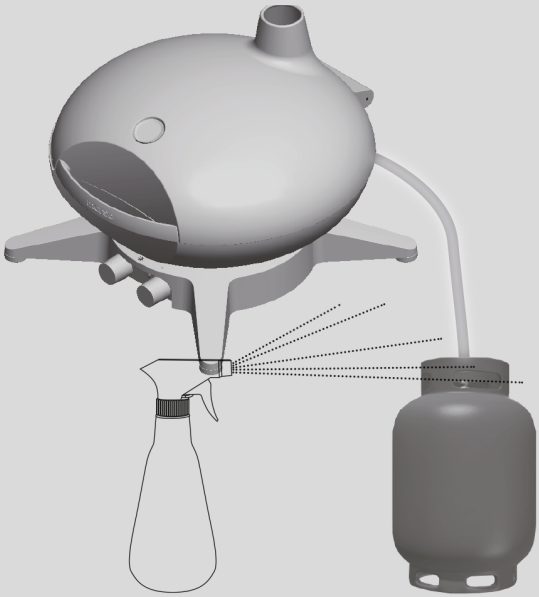

GENERAL INFORMATION

IMPORTANT

Read these instruction carefully prior to use. Familiarise yourself with the appliance before connecting it to it's gas container. Keep these instructions for future reference.

IF YOU SMELL GAS

1. Shut off gas to the barbecue at its source, if possible.
2. Extinguish any open flame.
3. Open hood.
4. If odour continues immediately call your gas supplier or fire department.

Replacement of pressure control and hose connector shall be carried out using Morsø genuine products only. Contact your local dealer.

NOTE: If it is a gas product, the thread between the gas hose and the grill is fastened the other way around (anti-clockwise).

Gas Installation Codes

- Barbecues must be used in accordance with the installation requirements of your gas supply authority.
- Barbecues for use with bottled gas are labelled 'propane gas' or 'Universal L.P.G'.

Clearances

Minimum Clearances from combustible materials must be: Rear - 300mm Sides - 300mm Above - 1000mm

Specifications

Barbecue specifications can be found on the data label attached to the barbecue body.

Hose & Regulator Safety

The regulator and hose assembly supplied with the appliance are suitable for Propane & Butane mix Gas only. The type of regulator to be used with the product must comply with standard EN16129. The pressure regulator and hose assembly supplied with the Morsø Forno Gas must be used. **Replacement of pressure control and hose connector shall be carried out using Morsø genuine products only.** Contact your local dealer.

The gas regulator and hose must be replaced at a minimum within the legally required interval in your country. Morsø Jernstøberi recommends replacing them at least every three years. Always remember to perform a leak test on the regulator and hose before using the grill. When connecting the hose and regulator assembly to the gas cylinder, take care to avoid unnecessary twist- ing of the flexible hose.



Twist Fold Perish

After the assembly has been secured, turn on the gas and check for leaks by brushing a soap and water solution over all connections.

If you are unable to correct the leak by tightening the connections, turn off the gas and contact the supplier immediately.

Always ensure the Morsø Forno Gas is kept away from flammable materials and the gas cylinder clear of any heat source.

When changing over from an empty gas cylinder to a full one, make sure this procedure is carried out in a well ventilated location, outside, away from people and away from any sources of ignition; such as nakedflames, pilotflames, electric heaters/equipment.

Gas Cylinder Use & Safety

This is a low pressure barbecue and must only be used with the regulator supplied. Your barbecue is designed for use with propane gas cylinders certified to the UK market.

The gas cylinder should be filled by a reputable gas supplier and visually inspected and re-qualified at each filling.

Always keep cylinder in an upright position. Always close the cylinder valve when the barbecue is not in use.

Do not subject gas cylinder to excessive heat.

NEVER STORE YOUR GAS CYLINDER INDOORS

If you store your barbecue indoors, ALWAYS disconnect the gas cylinder first and store the cylinder safely outside. Cylinders must be stored outdoors in a well ventilated area out of reach of children, and must not be stored in a building, garage or any other enclosed area.

GENERAL INFORMATION



FOR YOUR SAFETY

Failure to comply with these instructions could result in a fire or explosion which could cause serious bodily injury, death or property damage.

CAUTION: Accessible parts may be very hot.

Keep young children away.

DO NOT modify this appliance.

DO NOT move this barbecue during use.

Turn off gas supply at the gas cylinder after use.

Parts sealed by the manufacturer or their agent must not be manipulated by the user. This barbecue is only to be used and stored outdoors.

- Never operate this barbecue without a regulator.
- Do not test for gas leaks with an open flame.
- If this information is not followed exactly a fire causing death or serious injury may occur. Do not store a spare gas cylinder under or near this barbecue. This barbecue is only to be used and stored outdoors.
- If there is a leak on your appliance (smell of gas) immediately attempt to turn off the cylinder valve. Remove the appliance to a well ventilated location away from any ignition source. Only check for leaks outdoors using soapy water. DO NOT try to detect leaks using a flame.
- Check for leaks by brushing a soap and water solution over all connections. If you are unable to correct the leak by tightening the connections, turn off the gas and contact customer service immediately.
- Only use the hose assembly as supplied with this appliance for connection to the cylinder - DO NOT USE ADAPTERS.
- Maximum hose length - 1000mm.
- After use turn the gas cylinder valve off, wait for the flame to go out, then turn the appliance control valve off.
- Avoid twisting or kinking the flexible hose.
- Do not store or use petrol or other flammable liquids in the vicinity of this or any other appliance.
- Do not store empty or full spare gas cylinders under or near this or any other appliance.
- Never test for gas leaks with a lit match or open flame. Never light barbecue with hood closed or before checking to ensure the burner tubes are fully seated over gas valve orifices.
- Never lean over cooking surface when lighting.
- Never alter or modify the regulator or gas supply assembly.
- This barbecue must not be used indoors.
- Only use in well ventilated areas.
- CARBON MONOXIDE HAZARD - USING THIS APPLIANCE IN AN ENCLOSED SPACE MAY CAUSE DEATH. DO NOT USE IN CARAVANS , TENTS, MARINE CRAFT, CARS, MOBILE HOMES OR SIMILAR LOCATIONS.
- This appliance shall only be used in an above ground open-air situation with natural ventilation, without stagnant areas, where gas leakage and products of combustion are rapidly dispersed by wind and natural convection.
- Ensure the barbecue is set up on a level and stable surface.
- Do not move the barbecue while in use or when hot. Remove the drip tray before moving.
- DO NOT use the BBQ as a hotplate. The warranty will be voided and it violates the gas regulations, the cooking grate provides the ventilation needed for the BBQ to operate safely. It is not designed to be a solid hotplate device.

IF THERE IS A LEAK

- Turn the cylinder off.
- Ventilate the area to disperse gas.
- Check all connections.
- If leak persists, keep the cylinder upright. Keep skin away from any gas or liquid escaping from the cylinder.
- Keep the cylinder at least 20 metres away from any sparks or ignition sources, including electrical equipment, camera flashes, engines and motors.
- Disperse gas by encouraging maximum ventilation and spraying with a fine water spray.

IF THERE IS A FIRE

- If the fire is at the barbecue, turn the gas off at the cylinder. Smother the flames with a wet cloth, fire blanket or extinguish using a fire extinguisher.
- If the fire is at the cylinder, or you can not get to the valve to turn the gas off, contact the fire brigade immediately.
- Using a garden hose, direct the water to the middle of the cylinder to keep it cool. Try not to extinguish the flame. At least if the gas is burning, it won't be able to build up pressure and explode.

Location of your Barbecue

DO NOT use your barbecue in garages, porches, sheds, breezeways, or other enclosed areas. Your barbecue is to be used OUTDOORS. The barbecue is not intended to be installed in or on recreational vehicles and/or boats and should not be placed under any surface that will burn. Do not obstruct the flow of combustion and ventilation air around the barbecue housing.

Protect Children
Keep children away from barbecue during use and until barbecue has cooled after you have finished. Do not allow children to operate barbecue.

Always ensure that no sporting or physical activities are carried out in close proximity to the barbecue during use and while still hot.

Tools You Will Need
Adjustable spanner, Philips head screwdriver.

Check Barbecue for any Damage
Inspect barbecue parts as you proceed. Contact your supplier for assistance regarding replacement of any damaged or missing parts. Do not assemble or operate a barbecue that appears damaged. Barbecues for use with gas cylinders are labelled 'Propane Gas'. Check labelling at the gas connection on your barbecue.

Gas Category	☐ I3+(28-30/37)	☐ I3 B/P(30)	☐ I3 B/P(50)
Gas and Supply Pressure	G30 Butane at 28-30 mbar G31 Propane at 37 mbar	G30 Butane and G31 Propane at 30 mbar	G30 Butane and G31 Propane at 50 mbar
Country Code	BE, CH, CY, CZ, ES, FR, GB, GR, IE, IT, LT, LU, LV, PT, SK, SI	BE,CY, DK, EE, FR, GB, HU, IT, LT, NL, NO, SE, SI, SK, RO, HR, TR, BG, IS, LU, MT, FI	AT, CH, DE, SK
Burner	Main Burner × 2	Main Burner × 2	Main Burner × 2
Nominal Heat Input	Outer: 2.9 kW + Inner: 1.8 KW	Outer: 2.9 kW + Inner: 1.8 KW	Outer:2.9 kW + Inner: 1.8 KW
Burner Injector Size	Ø0.8/0.65 mm	Ø0.8/0.65 mm	Ø0.72/0.58 mm
Total Heat Input	4.8 kW（G30:349g/h；G31:343g/h）		Made in Taiwan

SUITABLE GAS TANKS
There are many different sizes of tank.
The figure shows the maximum tank size.

- Capacity of gas tank: Maximum 11kg
- Height of gas tank: Maximum 595 mm
- Diameter of gas tank: Maximum 304 mm

Location of gas tank
Make sure there are no kinks in the gas hose.
The gas hose may be a maximum of 1 m in length.

EXPLODED DIAGRAM

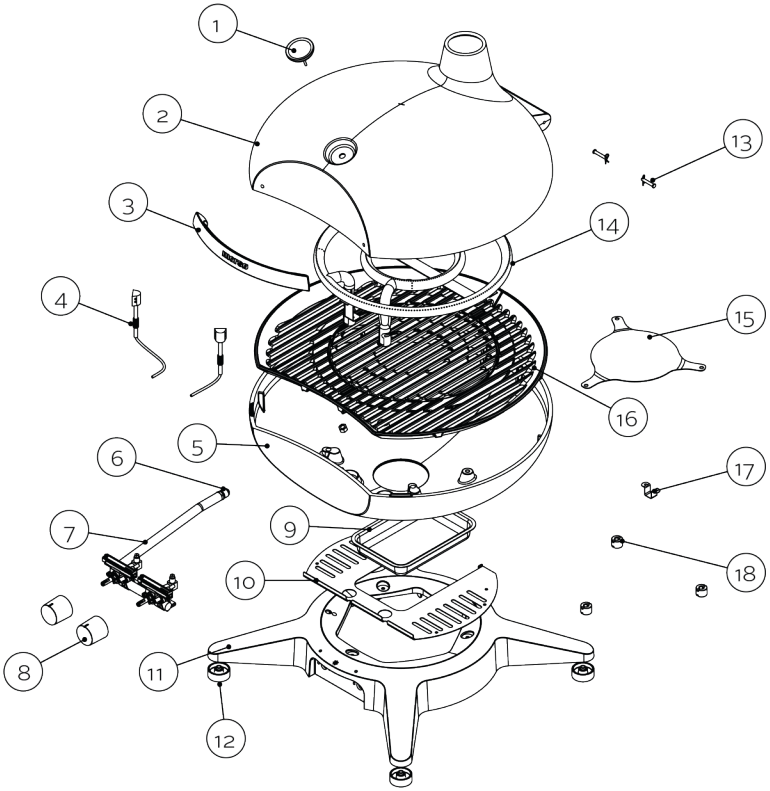

PARTS LIST

Part	Description	QTY
1	Temperature Gauge	1
2	Lid	1
3	Lid Handle	1
4	Ignition needle	2
5	Bowl	1
6	Adapter	1
7	Valve	1
8	Knob	2
9	Fat Cup	1
10	Fat Cup Support	1

Part	Description	QTY
11	Base	1
12	Rubbet gasket	4
13	Buckle	2
14	Burner	1
15	Overheating protection	1
16	Cooking Grate	3
17	Sheet metal	1
18	Heat Insulator	3

ASSEMBLY INSTRUCTIONS

Remove any transit protection material.

STEP 1
Attach the lid handle using the fasteners as shown.

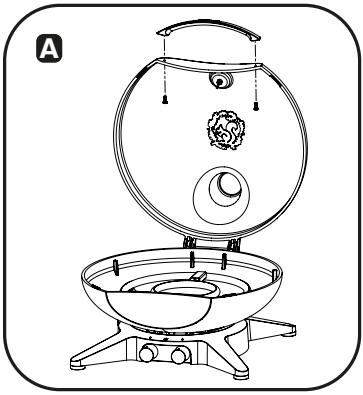

CONNECTING THE GAS CYLINDER

There are two different types of gas that can be used on your gas bbq depending on where you live, that being either butane or propane gas.
Both are supplied in gas cylinders.

The gas cylinder must be positioned at ground level at a plane flame-proof surface by the bbq.

The connection between the gas cylinder and the bbq is made with a regulator

It is important that you use the correct regulator for the particular type of gas you purchase.

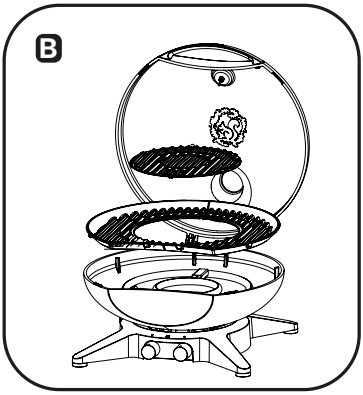

GENERAL INFORMATION

CONNECTING & DISCONNECTING TO GAS SOURCE

Familiarise yourself with the general information and safety guidelines located at the front of this manual.

Check

1. Gas cylinder is filled. A sloshing sound will be heard when shaken.
2. The burner control is in the 'OFF' position

Connecting

1. Ensure valve is in OFF position.
2. Check for any damage to the cylinder connection.
3. Attach the regulator to the cylinder valve.
4. Use a soapy water solution to check the joint. If bubbles appear the connection will need to be retightened.

Length	Width	Height
575 mm	530 mm	421 mm

IMPORTANT

- IMPORTANT: Before connecting and disconnecting barbecue to gas source, make sure burner controls are in 'OFF' position.
- CAUTION: When the barbecue is not in use, the gas cylinder must be disconnected.
- Check that the seals between the appliance and the gas cylinder are in place and in good condition before connecting the gas cylinder.
- Do not use this appliance if it has damaged or worn seals.
- NOTE: If for some reason, ignitor fails to produce a spark at the electrode, barbecue can be lit by a long barbecue match with hood open insert the match into a hole on the underside of the barbecue and turn gas control to high.
- Check performance of burner prior to installing barbecue plates.
- Do not smoke when attempting to ignite barbecue.
- Never use volcanic rock, heat beads or other material.
- Always use protective gloves when handling hot components.

IGNITION PROCEDURE

1. Raise the lid of the gas grill – set the cylinder valve to position ON.

2. Push in the gas control button and turn it anticlockwise. Hold the gas control button in this position for about 5 seconds, thus allowing the gas to stream up to the burner. Now, turn the button fully anti-clockwise until you hear a 'click/spark' and check whether the spark has lit the burner.
3. When the burner is lit, let go of the gas control button. You can now turn the control button from 'MAX' to 'MIN' depending on the required heat.
4. If the burner does not light, repeat 'step 2' two to three times, until the burner is lit.
5. If, after several attempts, the burner still does not light, cut off the gas supply and check whether the gas supply is blocked.

If re–ignition is necessary while the gas barbecue is still hot, you must wait for a minimum of 5 minutes before commencing to re–ignite (this allows accumulated gas fumes to clear).

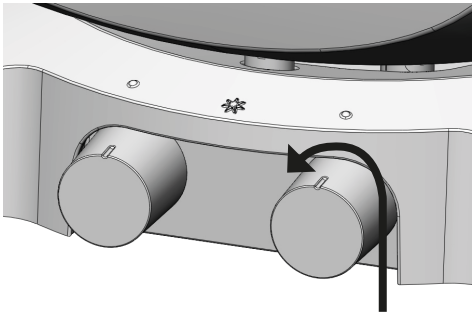

1. PUSH **2. TURN GENTLY**

IMPORTANT

The hood must be in the open position for lighting.

Do not smoke at any time when attempting to ignite the barbecue burners.

Do not leave the barbecue unattended when alight.

NEVER cover the chimney, completely or partially.

OPERATION

BURNER OPERATION & IGNITION SYSTEM CHECK

Problem	Possible Reason	Solution
Burner will not ignite	Control knob is closed	Turn knob to high when lighting
	The ignition needle is faulty	The grill is lit using a long grill match with the lid open. Lead the match through the grilling grid while turning the gas control to the left.
Food is not cooking or is taking too long	Burner has gone out	Check that the gas bottle is not empty and reignite the burner
	Cooking surface was not given enough time to warm up before the food was applied	Remove the food and give the burner time to warm the cooking surface (5-10 mins)
	There is too much food on the cooking surface	Cook smaller portions

Should you experience difficulties when lighting up your grill, the following may help:
1. Adjustment of the 'Piezo' spark igniter: It is important to ensure that the 'Piezo' (spark) igniter is correctly positioned opposite the holes of the burner. The igniter may possibly have moved during transport or use. When the grill is cold, the 'Piezo' igniter can be carefully adjusted, using your fingers or a small pair of pincers. Make sure that the needle of the 'Piezo' igniter gets closer to the burner (a distance of about 1-3 mm between the tip of the needle and the burner) and that the needle is pointed at a hole in the burner.

2. Cleaning of the burner: Food scraps, fat, or other impurities may occasionally be deposited on the burner and thus block some of its holes. Make sure that the grill is cold, remove the grilling grid and use a soft wire brush – for instance the "Morsø Brush & Scraper Kit" – to cleanse the burner holes. If there are still blocked burner holes, a needle or a paper clip can be used to clear the holes. Be sure not to push the 'Piezo' burner during this process. Watch the "How to" video on morsoe.com

OPERATING PROCEDURE

Cooking: The control knob can be turned from 'MAX' to 'MIN' depending on the heat required.

IMPORTANT

Make sure to clean your appliance before its first use, and make sure that there are no packaging material left on the product.
Make sure to Heat the product at max temp for at least 15 minutes before using the product for the first time.
If your product has a lid it needs to be pre heated with a closed lid.
If there is a breach in the enamel coating or enamel flakes have fallen off the Grill grate (or cooking area), then the grill grate needs to be replaced
The grill must always be thoroughly heated prior to cooking.

MAINTENANCE:
In the course of regular use and exposure to the elements, there will always be wear and tear and patination of outdoor products. This is quite normal and, hence, also apply to the Morsø Outdoor products. Thus, the occurrence of scratches and the formation of corrosion will appear, but this is easily repaired by way of the Maintenance Kit for Morsø Forno Gas and Morsø Balcone. Using the maintenance kit, you can refresh your Morsø Forno Gas to make it appear almost new. You find an instruction video that explains the process on our website – morsoe.com.
We always recommend the use of a Morsø cover for the protection of your grill when it is not in use. Important! – Always make sure that your grill is completely dry and cooled off before putting on the cover.
A Morsø cover will also prevent the seepage of moisture and rainwater via the chimney and, thus, the risk of rust on the cast-iron grate, when the grill is not in use.

CARE & MAINTENANCE

As with all appliances, proper care and maintenance will keep them in top operating condition and prolong their life. Your new gas barbecue is no exception. By following these cleaning procedures on a timely basis, your barbecue will be kept clean and working properly with minimum effort.

Spiders and small insects occasionally spin webs or make nests in the burner tubes during warehousing and transit.

These webs can lead to a gas flow obstruction which could result in a fire in and around the burner tubes. Cleaning with a soft brush before use and at least every six months is recommended.

This type of problem is known as 'FLASH-BACK' and can cause serious damage to your barbecue and create an unsafe operating condition for the user. Although an obstructed burner tube is not the only cause of 'FLASHBACK' it is the most common cause and frequent inspection and cleaning of the burner tubes is necessary.

Flash-Back

If fire occurs in and around the burner, immediately turn off gas at its source and turn the burner control to 'OFF', wait until the barbecue has cooled, then clean the burner tubes and burner ports.

Cleaning the Cooking Surface

After cooking, turn burner control to 'OFF' and let barbecue cool before attempting to clean the grill plateor grate. Before first use and periodically, it is suggested that you wash the grill plate and grate in a mild soap and warm water solution.
Go to morsoe.com to watch the instruction video which explains how, easily and efficiently, you clean and maintain your grilling grate.

Care of Cooking Surface

Use and care of the cooking surface is important. Do not use pans on the cooking surface. Do not overheat the cooking surface with the hood down or no food on the cooking surface.

Cleaning the Drip Tray

To avoid fat or grease dripping from the barbecue remove and empty the drip tray after each use. Wait until the drip tray is cool to touch before disposing of contents.

The drip tray should be washed periodically in a mild detergent and warm water solution.
Watch the "How to" video on morsoe.com

IMPORTANT

- Beware of spiders and wasps. Burner tube should be inspected and cleaned periodically.
- Service on this appliance shall only be carried out by or under the guidance of a certified professional.
- To avoid any flare-ups, it is recommended that the drip tray be checked and emptied regularly. Contents of the drip tray may be very hot during cooking. If emptied during extended cooking extreme caution should be taken and direct contact by hand should be avoided at all times. Allow to cool completely before disposing of the contents.

SAFE APPLIANCE LOCATIONS

This appliance shall only be used in an above ground open-air situation with natural ventilation, without stagnant areas, where gas leakage and products of combustion are rapidly dispersed by wind and natural convection.

Any enclosure in which the appliance is used shall comply with the following:

An enclosure with walls on all sides, but at least one permanent opening at ground level and no overhead cover.

Within a partial enclosure that includes an overhead cover and no more than two walls.

Within a partial enclosure that includes an overhead cover and more than two walls, the following will apply:

- at least 25% of the total wall area is completely open, and
- at least 30% of the remaining wall area is open and unrestricted.

In the case of balconies, at least 20% of the total wall area shall be and remain open and unrestricted.

DIAGRAMMATIC REPRESENTATI ONS OF OUTDOOR AREAS

The following figures are diagrammatic representations of outdoor areas. Rectangular areas have been used in these figures – the same principles apply to any other shaped area.

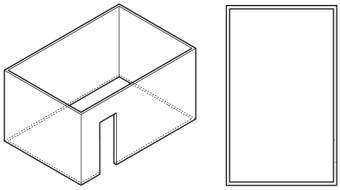

Outdoor Area - Example 1

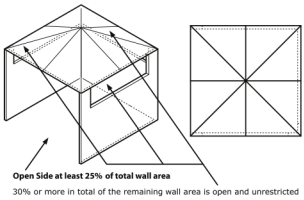

Outdoor Area - Example 4

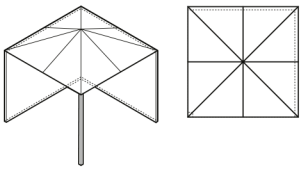

Outdoor Area - Example 2

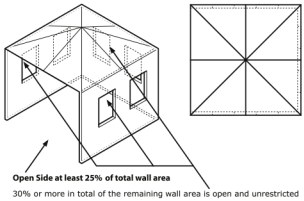

Outdoor Area - Example 5

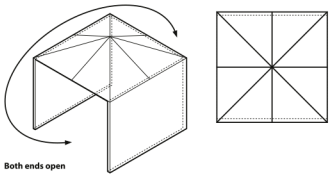

Outdoor Area - Example 3

morsø
DANISH DESIGN SINCE 1853

MORSØ FORNO GAS BBQ



MORSØ FORNO GAS *Grande*

UK

R-506

- Powerful stainless steel burner with rotary ignition for easy lighting
- Satin enamelled cast iron cooking grate – easy to cook on and clean
- Durable die cast aluminium bowl and hood
- Integrated thermometer for maximum control when cooking
- High dome hood – 19 cm – allows you to cook roasts easily
- Table available as an optional extra (sold separately)
- Supplied with hose and regulator so it's ready to use with a POL gas cylinder
- Gas certified to CE standards

Important: Retain these instructions for future use.

CE 51CS4816

READ ME FIRST

Gas leak testing

It is important that you leak test the BBQ before first use and every time the gas cylinder is refilled and reconnected to the BBQ.

To Complete Leak Test

- Make sure all the control knobs are OFF.
- In a small container, mix up a solution of water and detergent/soap.
- Mix the solution well (about the same concentrate as washing up water).
- Turn the cylinder ON by rotating the knob to open position.
- Using a brush or spay bottle apply the soap solution to the gas line and each join in the gas line including:
  - the gas connection at the inlet of the BBQ
  - all gas hose connections
  - the gas connection at the gas cylinder
- If bubbles appear, there is a gas leak.
- If the leak is at the connection, re-tighten and re-seal.
- If the leak is anywhere else or you cannot resolve the leak by tightening the connection DO NOT PROCEED.
- Replace gas hose and regulator.
- Replacement hose and regulators can be purchased from your local BBQ retail specialist.

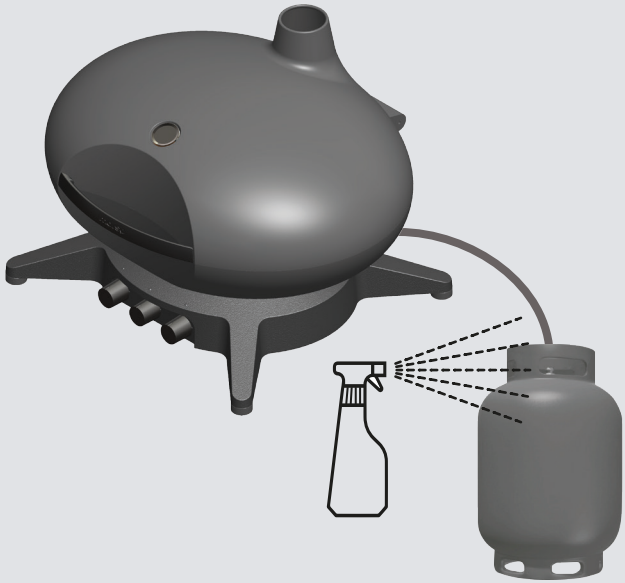

GENERAL INFORMATION

IMPORTANT

Read these instruction carefully prior to use. Familiarise yourself with the appliance before connecting it to it's gas container. Keep these instructions for future reference.

IF YOU SMELL GAS

1. Shut off gas to the barbecue at its source, if possible.
2. Extinguish any open flame.
3. Open hood.
4. If odour continues immediately call your gas supplier or fire department.

Replacement of pressure control and hose connector shall be carried out using Morsø genuine products only. Contact your local dealer.

NOTE: If it is a gas product, the thread between the gas hose and the grill is fastened the other way around (anti-clockwise).

Gas Installation Codes

- Barbecues must be used in accordance with the installation requirements of your gas supply authority.
- Barbecues for use with bottled gas are labelled 'propane gas' or 'Universal L.P.G'.

Clearances

Minimum Clearances from combustible materials must be: Rear - 300mm Sides - 300mm Above - 1000mm

Specifications

Barbecue specifications can be found on the data label attached to the barbecue body.

Hose & Regulator Safety

The regulator and hose assembly supplied with the appliance are suitable for Propane & Butane mix Gas only. The type of regulator to be used with the product must comply with standard EN16129. The pressure regulator and hose assembly supplied with the Morsø Forno Gas must be used. **Replacement of pressure control and hose connector shall be carried out using Morsø genuine products only.** Contact your local dealer.

The gas regulator and hose must be replaced at a minimum within the legally required interval in your country. Morsø Jernstøberi recommends replacing them at least every three years. Always remember to perform a leak test on the regulator and hose before using the grill. When connecting the hose and regulator assembly to the gas cylinder, take care to avoid unnecessary twist- ing of the flexible hose.



Twist Fold Perish

After the assembly has been secured, turn on the gas and check for leaks by brushing a soap and water solution over all connections.

If you are unable to correct the leak by tightening the connections, turn off the gas and contact the supplier immediately.

Always ensure the Morsø Forno Gas is kept away from flammable materials and the gas cylinder clear of any heat source.

When changing over from an empty gas cylinder to a full one, make sure this procedure is carried out in a well ventilated location, outside, away from people and away from any sources of ignition; such as nakedflames, pilotflames, electric heaters/equipment.

Gas Cylinder Use & Safety

This is a low pressure barbecue and must only be used with the regulator supplied. Your barbecue is designed for use with propane gas cylinders certified to the UK market.

The gas cylinder should be filled by a reputable gas supplier and visually inspected and re-qualified at each filling.

Always keep cylinder in an upright position. Always close the cylinder valve when the barbecue is not in use.

Do not subject gas cylinder to excessive heat.

NEVER STORE YOUR GAS CYLINDER INDOORS

If you store your barbecue indoors, ALWAYS disconnect the gas cylinder first and store the cylinder safely outside. Cylinders must be stored outdoors in a well ventilated area out of reach of children, and must not be stored in a building, garage or any other enclosed area.

GENERAL INFORMATION



FOR YOUR SAFETY

Failure to comply with these instructions could result in a fire or explosion which could cause serious bodily injury, death or property damage.
CAUTION: Accessible parts may be very hot.
Keep young children away.
DO NOT modify this appliance.
DO NOT move this barbecue during use.
Turn off gas supply at the gas cylinder after use.

Parts sealed by the manufacturer or their agent must not be manipulated by the user. This barbecue is only to be used and stored outdoors.

- Never operate this barbecue without a regulator.
- Do not test for gas leaks with an open flame.
- If this information is not followed exactly a fire causing death or serious injury may occur. Do not store a spare gas cylinder under or near this barbecue. This barbecue is only to be used and stored outdoors.
- If there is a leak on your appliance (smell of gas) immediately attempt to turn off the cylinder valve. Remove the appliance to a well ventilated location away from any ignition source. Only check for leaks outdoors using soapy water. DO NOT try to detect leaks using a flame.
- Check for leaks by brushing a soap and water solution over all connections. If you are unable to correct the leak by tightening the connections, turn off the gas and contact customer service immediately.
- Only use the hose assembly as supplied with this appliance for connection to the cylinder - DO NOT USE ADAPTERS.
- Maximum hose length - 1000mm.
- After use turn the gas cylinder valve off, wait for the flame to go out, then turn the appliance control valve off.
- Avoid twisting or kinking the flexible hose.
- Do not store or use petrol or other flammable liquids in the vicinity of this or any other appliance.
- Do not store empty or full spare gas cylinders under or near this or any other appliance.
- Never test for gas leaks with a lit match or open flame. Never light barbecue with hood closed or before checking to ensure the burner tubes are fully seated over gas valve orifices.
- Never lean over cooking surface when lighting.
- Never alter or modify the regulator or gas supply assembly.
- This barbecue must not be used indoors.
- Only use in well ventilated areas.
- **Carbon monoxide hazard - Using this appliance in an enclosed space may cause death. Do not use in caravans, tents, marine craft, cars, mobile homes or similar locations.**
- This appliance shall only be used in an above ground open-air situation with natural ventilation, without stagnant areas, where gas leakage and products of combustion are rapidly dispersed by wind and natural convection.
- Ensure the barbecue is set up on a level and stable surface.
- Do not move the barbecue while in use or when hot. Remove the drip tray before moving.
- DO NOT use the BBQ as a hotplate. The warranty will be voided and it violates the gas regulations, the cooking grate provides the ventilation needed for the BBQ to operate safely. It is not designed to be a solid hotplate device.

IF THERE IS A LEAK

- Turn the cylinder off.
- Ventilate the area to disperse gas.
- Check all connections.
- If leak persists, keep the cylinder upright. Keep skin away from any gas or liquid escaping from the cylinder.
- Keep the cylinder at least 20 metres away from any sparks or ignition sources, including electrical equipment, camera flashes, engines and motors.
- Disperse gas by encouraging maximum ventilation and spraying with a fine water spray.

IF THERE IS A FIRE

- If the fire is at the barbecue, turn the gas off at the cylinder. Smother the flames with a wet cloth, fire blanket or extinguish using a fire extinguisher.
- If the fire is at the cylinder, or you can not get to the valve to turn the gas off, contact the fire brigade immediately.
- Using a garden hose, direct the water to the middle of the cylinder to keep it cool. Try not to extinguish the flame. At least if the gas is burning, it won't be able to build up pressure and explode.

Location of your Barbecue

DO NOT use your barbecue in garages, porches, sheds, breezeways, or other enclosed areas. Your barbecue is to be used OUTDOORS. The barbecue is not intended to be installed in or on recreational vehicles and/or boats and should not be placed under any surface that will burn. Do not obstruct the flow of combustion and ventilation air around the barbecue housing.

Protect Children
Keep children away from barbecue during use and until barbecue has cooled after you have finished. Do not allow children to operate barbecue.

Always ensure that no sporting or physical activities are carried out in close proximity to the barbecue during use and while still hot.

Tools You Will Need
Adjustable spanner, Philips head screwdriver.

Check Barbecue for any Damage
Inspect barbecue parts as you proceed. Contact your supplier for assistance regarding replacement of any damaged or missing parts. Do not assemble or operate a barbecue that appears damaged. Barbecues for use with gas cylinders are labelled 'Propane Gas'. Check labelling at the gas connection on your barbecue.

Gas Category	☐ I3+(28-30/37)	☐ I3 B/P(30)	☐ I3 B/P(50)
Gas and Supply Pressure	G30 Butane at 28-30 mbar G31 Propane at 37 mbar	G30 Butane and G31 Propane at 30 mbar	G30 Butane and G31 Propane at 50 mbar
Country Code	BE, CH, CY, CZ, ES, FR, GB, GR, IE, IT, LT, LU, LV, PT, SK, SI	BE,CY, DK, EE, FR, GB, HU, IT, LT, NL, NO, SE, SI, SK, RO, HR, TR, BG, IS, LU, MT, FI	AT, CH, DE, SK
Burner	Main Burner × 3	Main Burner × 3	Main Burner × 3
Nominal Heat Input	2.8 kW × 1 / 2.3 kW × 2	2.8 kW × 1 / 2.3 kW × 2	2.8 kW × 1 / 2.3 kW × 2
Burner Injector Size	Middle: Ø0.8 mm Left & Right: Ø0.74 mm	Middle: Ø0.8 mm Left & Right: Ø0.74 mm	Middle: Ø0.72 mm Left & Right: Ø0.63mm
Total Heat Input	7.4 kW（G30:538g/h；G31:529g/h）		Made in Taiwan

SUITABLE GAS TANKS

There are many different sizes of tank.
The figure shows the maximum tank size.

- Capacity of gas tank: Maximum 11 kg
- Height of gas tank: Maximum 595 mm
- Diameter of gas tank: Maximum 304 mm

Location of gas tank
Make sure there are no kinks in the gas hose.
The gas hose may be a maximum of 1 m in length.

EXPLODED DIAGRAM

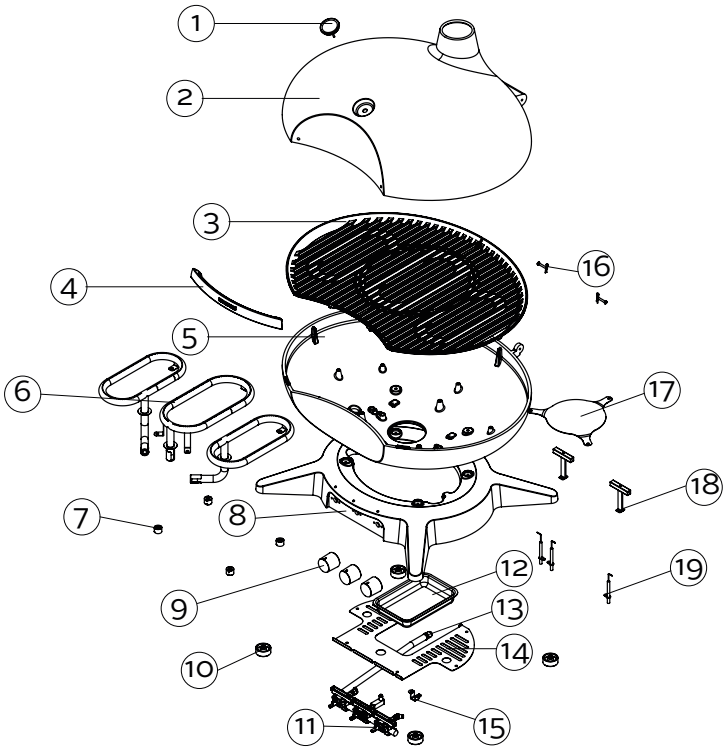

PARTS LIST

Part	Description	QTY
1	Temperature Gauge	1
2	Lid	1
3	Cooking Grate	3
4	Lid Handle	1
5	Bowl	1
6	Burner	3
7	Heat Insulator	4
8	Base	1
9	Knob	3
10	Plastic Feet	4

Part	Description	QTY
11	Valve	1
12	Grease Cup	1
13	Adapter	1
14	Grease Cup Support	1
15	Fixed Plate	1
16	Lid Hinge & R-Pin	2
17	Hole Cover	1
18	Frame Bridge	2
19	Ignition Electrode	3

ASSEMBLY INSTRUCTIONS

Remove any transit protection material.

STEP 1
Attach the lid handle using the fasteners as shown.

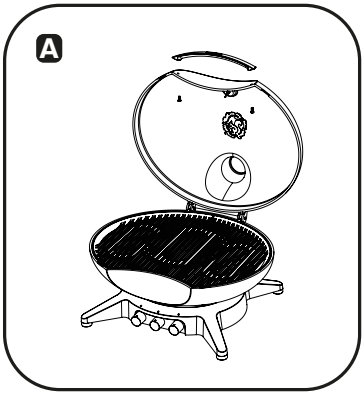

CONNECTING THE GAS CYLINDER

There are two different types of gas that can be used on your gas bbq depending on where you live, that being either butane or propane gas. Both are supplied in gas cylinders.

The gas cylinder must be positioned at ground level at a plane flame-proof surface by the bbq.

The connection between the gas cylinder and the bbq is made with a regulator

It is important that you use the correct regulator for the particular type of gas you purchase.

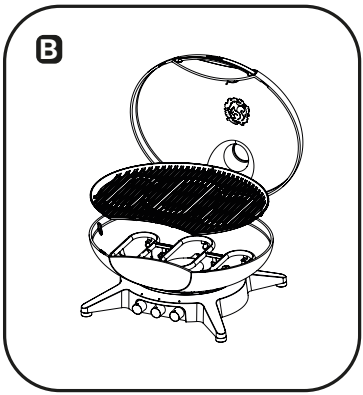

GENERAL INFORMATION

CONNECTING & DISCONNECTING TO GAS SOURCE

Familiarise yourself with the general information and safety guidelines located at the front of this manual.

Check

1. Gas cylinder is filled. A sloshing sound will be heard when shaken.
2. The burner control is in the 'OFF' position

Connecting

1. Ensure valve is in OFF position.
2. Check for any damage to the cylinder connection.
3. Attach the regulator to the cylinder valve.
4. Use a soapy water solution to check the joint. If bubbles appear the connection will need to be retightened.

Length	Width	Height
726 mm	627 mm	498 mm

IMPORTANT

- IMPORTANT: Before connecting and disconnecting barbecue to gas source, make sure burner controls are in 'OFF' position.
- CAUTION: When the barbecue is not in use, the gas cylinder must be disconnected.
- Check that the seals between the appliance and the gas cylinder are in place and in good condition before connecting the gas cylinder.
- Do not use this appliance if it has damaged or worn seals.
- NOTE: If for some reason, ignitor fails to produce a spark at the electrode, barbecue can be lit by a long barbecue match with hood open insert the match into a hole on the underside of the barbecue and turn gas control to high.
- Check performance of burner prior to installing barbecue plates.
- Do not smoke when attempting to ignite barbecue.
- Never use volcanic rock, heat beads or other material.
- Always use protective gloves when handling hot components.

IGNITION PROCEDURE

1. Raise the lid of the gas grill – set the cylinder valve to position ON.
2. Push in the gas control button and turn it anticlockwise. Hold the gas control button in this position for about 5 seconds, thus allowing the gas to stream up to the burner. Now, turn the button fully anticlockwise until you hear a 'click/spark' and check whether the spark has lit the burner.
3. When the burner is lit, let go of the gas control button. You can now turn the control button from 'MAX' to 'MIN' depending on the required heat.
4. If the burner does not light, repeat 'step 2' two to three times, until the burner is lit.
5. If, after several attempts, the burner still does not light, cut off the gas supply and check whether the gas supply is blocked.

If re–ignition is necessary while the gas barbecue is still hot, you must wait for a minimum of 5 minutes before commencing to re–ignite (this allows accumulated gas fumes to clear).

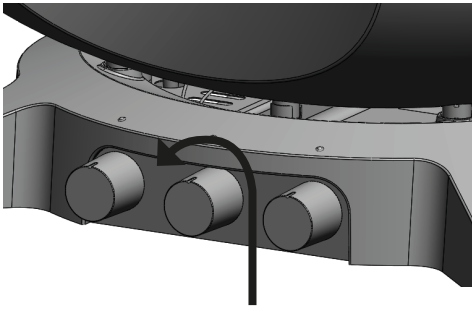

1. PUSH **2. TURN GENTLY**

IMPORTANT

The hood must be in the open position for lighting.

Do not smoke at any time when attempting to ignite the barbecue burners.

Do not leave the barbecue unattended when alight.

NEVER cover the chimney, completely or partially.

OPERATION

BURNER OPERATION & IGNITION SYSTEM CHECK

Problem	Possible Reason	Solution
Burner will not ignite	Control knob is closed	Turn knob to high when lighting
	The ignition needle is faulty	The grill is lit using a long grill match with the lid open. Lead the match through the grilling grid while turning the gas control to the left.
Food is not cooking or is taking too long	Burner has gone out	Check that the gas bottle is not empty and reignite the burner
	Cooking surface was not given enough time to warm up before the food was applied	Remove the food and give the burner time to warm the cooking surface (5-10 mins)
	There is too much food on the cooking surface	Cook smaller portions

Should you experience difficulties when lighting up your grill, the following may help:
1. Adjustment of the 'Piezo' spark igniter: It is important to ensure that the 'Piezo' (spark) igniter is correctly positioned opposite the holes of the burner. The igniter may possibly have moved during transport or use. When the grill is cold, the 'Piezo' igniter can be carefully adjusted, using your fingers or a small pair of pincers. Make sure that the needle of the 'Piezo' igniter gets closer to the burner (a distance of about 1-3 mm between the tip of the needle and the burner) and that the needle is pointed at a hole in the burner.

2. Cleaning of the burner: Food scraps, fat, or other impurities may occasionally be deposited on the burner and thus block some of its holes. Make sure that the grill is cold, remove the grilling grid and use a soft wire brush – for instance the "Morsø Brush & Scraper Kit" – to cleanse the burner holes. If there are still blocked burner holes, a needle or a paper clip can be used to clear the holes. Be sure not to push the 'Piezo' burner during this process.
Watch the "How to" video on morsoe.com.

OPERATING PROCEDURE

Cooking: The control knob can be turned from 'MAX' to 'MIN' depending on the heat required.

IMPORTANT

Make sure to clean your appliance before its first use, and make sure that there are no packaging material left on the product.
Make sure to Heat the product at max temp for at least 15 minutes before using the product for the first time.
If your product has a lid it needs to be pre heated with a closed lid.
If there is a breach in the enamel coating or enamel flakes have fallen off the Grill grate (or cooking area), then the grill grate needs to be replaced
The grill must always be thoroughly heated prior to cooking.

MAINTENANCE:
In the course of regular use and exposure to the elements, there will always be wear and tear and patination of outdoor products. This is quite normal and, hence, also apply to the Morsø Outdoor products. Thus, the occurrence of scratches and the formation of corrosion will appear, but this is easily repaired by way of the Maintenance Kit for Morsø Forno Gas and Morsø Balcone. Using the maintenance kit, you can refresh your Morsø Forno Gas to make it appear almost new. You find an instruction video that explains the process on our website – morsoe.com.
We always recommend the use of a Morsø cover for the protection of your grill when it is not in use. Important! – Always make sure that your grill is completely dry and cooled off before putting on the cover.
A Morsø cover will also prevent the seepage of moisture and rainwater via the chimney and, thus, the risk of rust on the cast-iron grate, when the grill is not in use.

CARE & MAINTENANCE

As with all appliances, proper care and maintenance will keep them in top operating condition and prolong their life. Your new gas barbecue is no exception. By following these cleaning procedures on a timely basis, your barbecue will be kept clean and working properly with minimum effort.

Spiders and small insects occasionally spin webs or make nests in the burner tubes during warehousing and transit.

These webs can lead to a gas flow obstruction which could result in a fire in and around the burner tubes. Cleaning with a soft brush before use and at least every six months is recommended.

This type of problem is known as 'FLASH-BACK' and can cause serious damage to your barbecue and create an unsafe operating condition for the user. Although an obstructed burner tube is not the only cause of 'FLASHBACK' it is the most common cause and frequent inspection and cleaning of the burner tubes is necessary.

Flash-Back

If fire occurs in and around the burner, immediately turn off gas at its source and turn the burner control to 'OFF', wait until the barbecue has cooled, then clean the burner tubes and burner ports.

Cleaning the Cooking Surface

After cooking, turn burner control to 'OFF' and let barbecue cool before attempting to clean the grill plate or grate. Before first use and periodically, it is suggested that you wash the grill plate and grate in a mild soap and warm water solution.
Go to morsoe.com to watch the instruction video which explains how, easily and efficiently, you clean and maintain your grilling grate.

Care of Cooking Surface

Use and care of the cooking surface is important. Do not use pans on the cooking surface. Do not overheat the cooking surface with the hood down or no food on the cooking surface.

Cleaning the Drip Tray

To avoid fat or grease dripping from the barbecue remove and empty the drip tray after each use. Wait until the drip tray is cool to touch before disposing of contents.

The drip tray should be washed periodically in a mild detergent and warm water solution.
Watch the "How to" video on morsoe.com.

IMPORTANT

- Beware of spiders and wasps. Burner tube should be inspected and cleaned periodically.
- Service on this product shall only be carried out by or under the guidance of a certified professional
- To avoid any flare-ups, it is recommended that the drip tray be checked and emptied regularly. Contents of the drip tray may be very hot during cooking. If emptied during extended cooking extreme caution should be taken and direct contact by hand should be avoided at all times. Allow to cool completely before disposing of the contents.

SAFE APPLIANCE LOCATIONS

This appliance shall only be used in an above ground open-air situation with natural ventilation, without stagnant areas, where gas leakage and products of combustion are rapidly dispersed by wind and natural convection.

Any enclosure in which the appliance is used shall comply with the following:

An enclosure with walls on all sides, but at least one permanent opening at ground level and no overhead cover.

Within a partial enclosure that includes an overhead cover and no more than two walls.

Within a partial enclosure that includes an overhead cover and more than two walls, the following will apply:

- at least 25% of the total wall area is completely open, and
- at least 30% of the remaining wall area is open and unrestricted.

In the case of balconies, at least 20% of the total wall area shall be and remain open and unrestricted.

DIAGRAMMATIC REPRESENTATI ONS OF OUTDOOR AREAS

The following figures are diagrammatic representations of outdoor areas. Rectangular areas have been used in these figures – the same principles apply to any other shaped area.

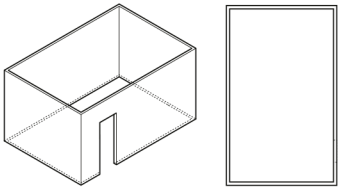

Outdoor Area - Example 1

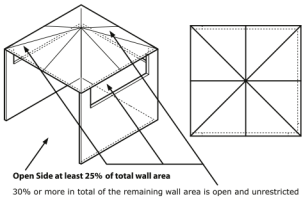

Outdoor Area - Example 4

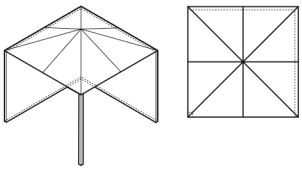

Outdoor Area - Example 2

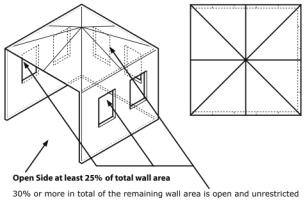

Outdoor Area - Example 5

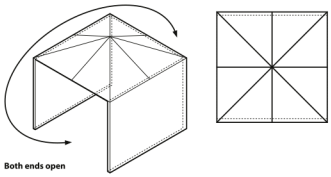

Outdoor Area - Example 3

DANISH DESIGN SINCE 1853

Keep your purchase receipt, as it will be needed in case of warranty claims.

Morsø Jernstøberi A/S - Furvej 6, DK-7900 Nykøbing Mors - E-Mail: info@morsoe.com - Website: www.morsoe.com

12.01.2026 - 72991300