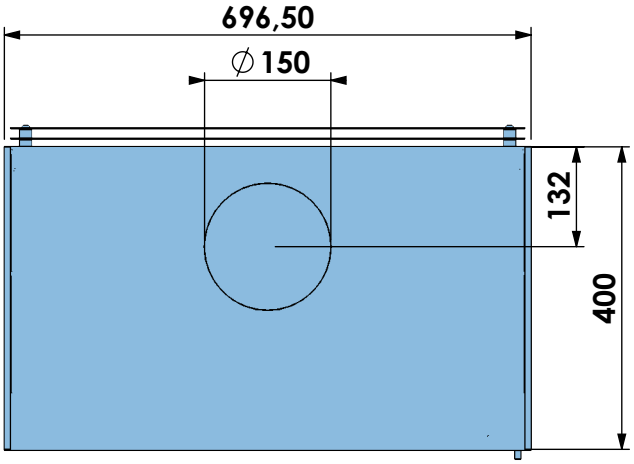

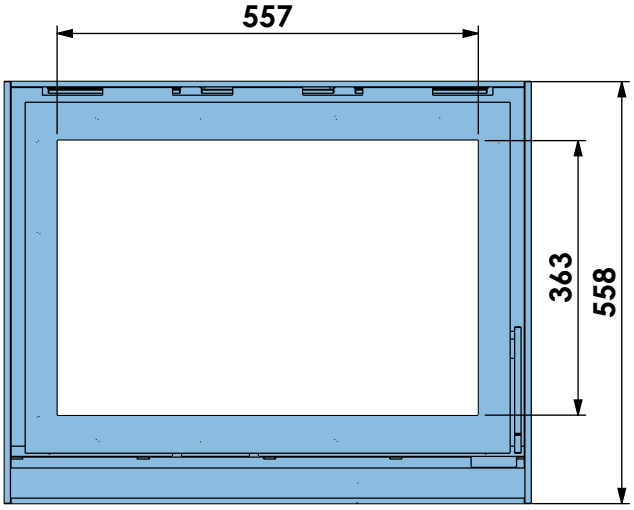

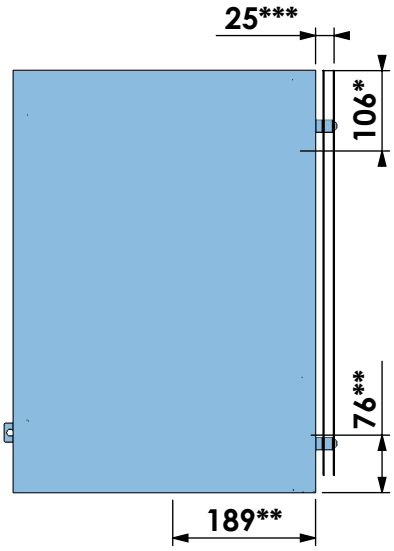

*** = optional flue gas outlet Ø150mm**
**** = optional air inlet Ø125mm**
***** = optional heat shield**

Plateau

Barbas Bellfires B.V.
Hallenstraat 17
5531 AB Bladel
The Netherlands
www.barbasbellfires.com

Name:
BOX 20 70 steel door

Modifications reserved

Projection: American

Scale: 1:10

Unit: mm

Version: **2**

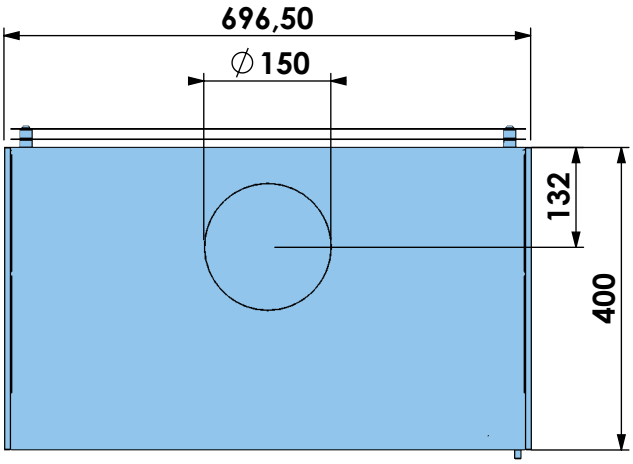

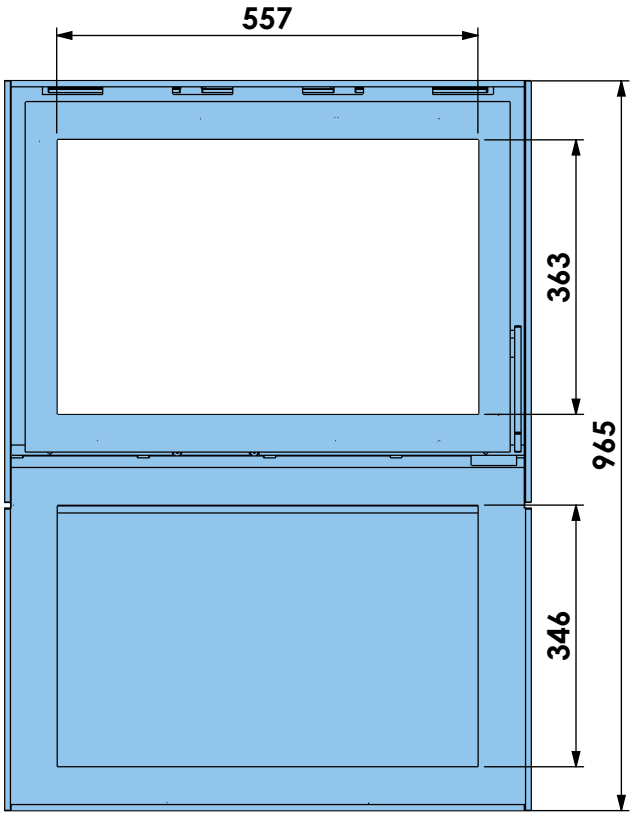

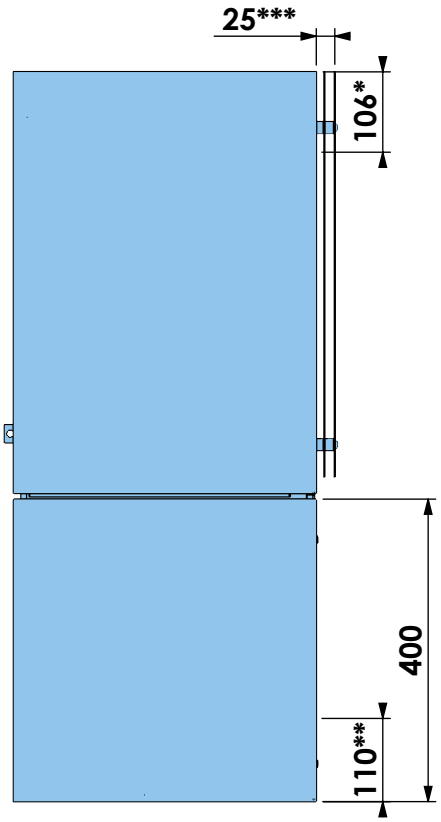

met houtopslagmodule
with log store
avec socle bûcher
mit Holzfach

*** = optional flue gas outlet Ø150mm**
**** = optional air inlet Ø125mm**
***** = optional heat shield**

barbas.
Barbas Bellfires B.V.
Hallenstraat 17
5531 AB Bladel
The Netherlands
www.barbasbellfires.com

Name: **BOX 20 70 steel door**

Modifications reserved

Projection: American

Scale: 1:10

Unit: mm

Version: **2**

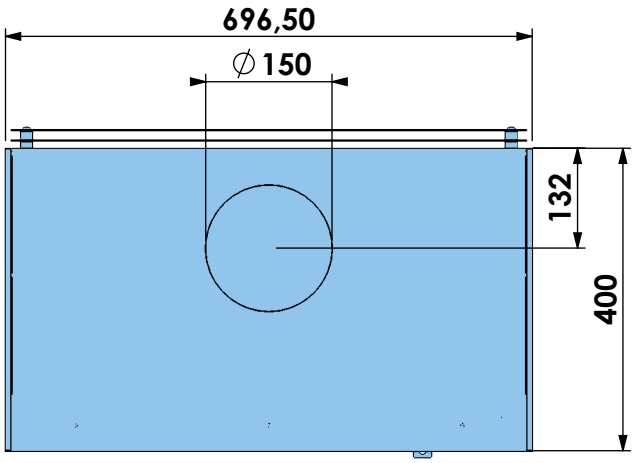

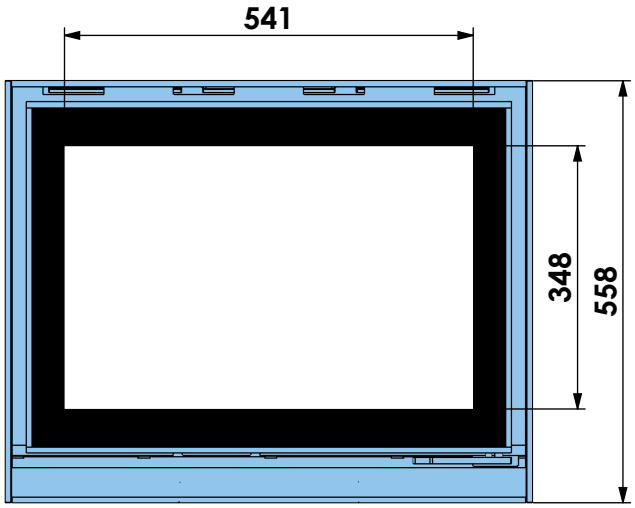

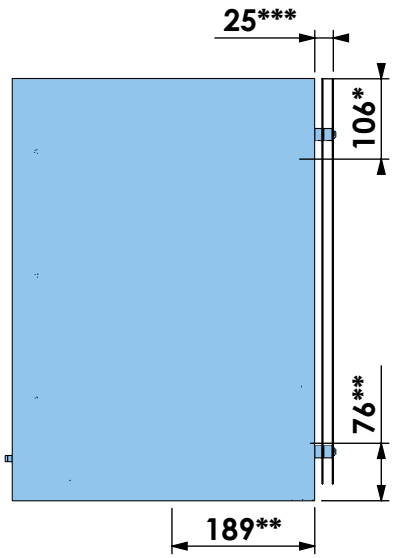

*** = optional flue gas outlet Ø150mm**
**** = optional air inlet Ø125mm**
***** = optional heat shield**

Plateau

Barbas Bellfires B.V.
Hallenstraat 17
5531 AB Bladel
The Netherlands
www.barbasbellfires.com

Name:
BOX 20 70 glass door

Modifications reserved

Projection: American

Scale: 1:10

Unit: mm

Version: **2**

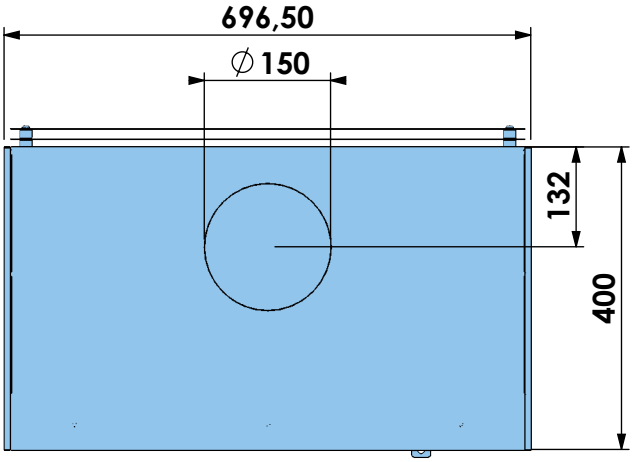

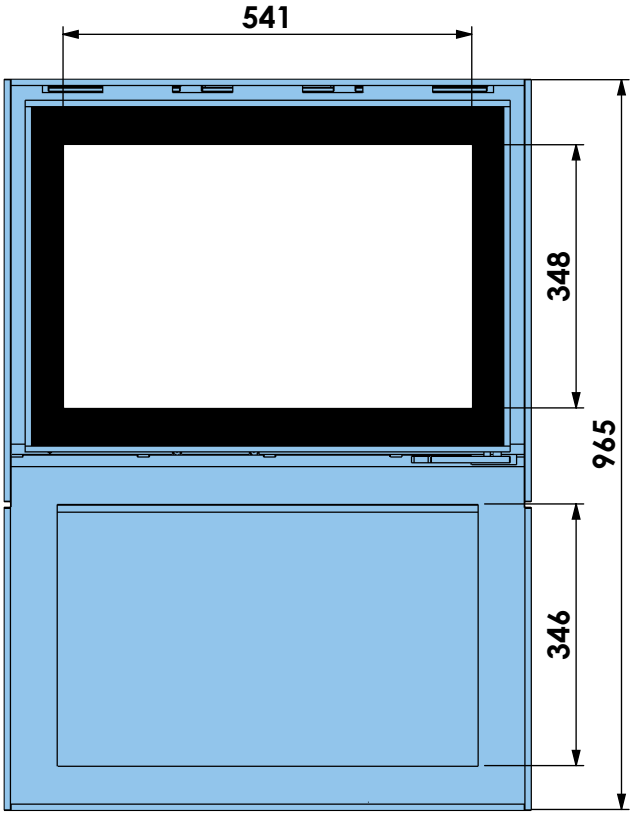

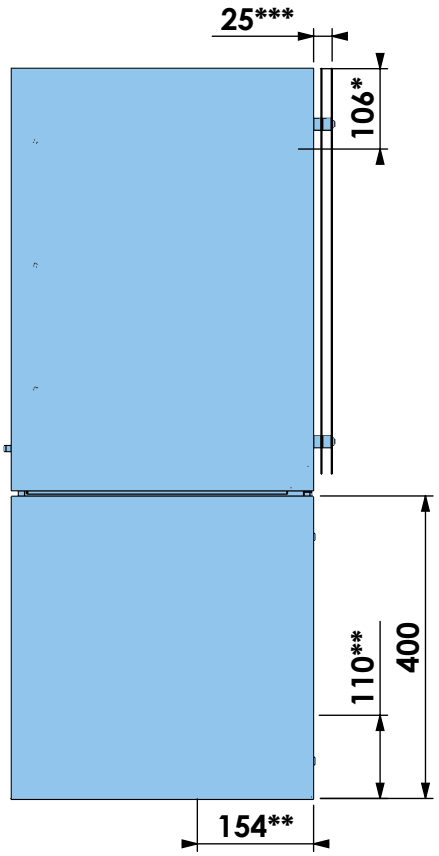

met houtopslagmodule
with log store
avec socle bûcher
mit Holzfach

*** = optional flue gas outlet Ø150mm**
**** = optional air inlet Ø125mm**
***** = optional heat shield**

barbas.
Barbas Bellfires B.V.
Hallenstraat 17
5531 AB Bladel
The Netherlands
www.barbasbellfires.com

Name:
BOX 20 70 glass door

Modifications reserved

Projection: American

Scale: 1:10
Unit: mm

Version: 2